12-0437.1 G

December 22, 2014

John W. Goodwin, Jr.
c/o Herrick & Salsbury, Inc.
Attention: Steve Salsbury
P.O. Box 652
Ellsworth, ME 04605

Subject: Hydrogeological Services Report
Well Installations, Gravel Pit Monitoring and Testing
Lamoine, Maine

Dear Steve,

As requested, S. W. Cole Engineering, Inc. (S.W.COLE) is pleased to submit this Hydrogeological Services Report in accordance with our Agreement dated August 18, 2014. This report presents the data collected from the East Lamoine Pit[1] (Pit) owned by John W. Goodwin, Jr. in the Town of Lamoine (Town) in association with:

- Installation of monitoring wells GDW-1, GDW-2 and GDW-3;
- Sampling and analyses of wells GDW-1, GDW-3, and B-2 in the Pit and adjacent property wells GW-3 (Gott Pit) and JJW-1 (Jordan Pit); and
- Water level measurements in wells GDW-1-2014, GDW-2-2014, GDW-3-2014, B-1, B-2, B-3, GW-3 (Gott Pit) and JJW-1 (Jordan Pit).

These Hydrogeological Services are subject to the limitations described in Appendix A.

PURPOSE

We understand that the purpose of our work was to provide hydrogeological data for the characterization of groundwater quality, depth/elevation, and flow direction for the Pit.

[1] The Goodwin East Lamoine Pit comprises 47.4 acres of existing and proposed gravel operations.

SCOPE OF SERVICES

S.W.COLE performed the following scope of services based on survey information provided by Herrick & Salsbury and ongoing water level measurements and water quality testing that has been performed by S.W.COLE:

- Coordinated with New England Boring Contractors of Hermon, Maine to perform overburden borings and install monitoring wells at the selected locations in the Pit;
- Observed the drilling and installation of monitoring wells GDW-1, GDW-2, and GDW-3 (locations shown on Sheet 1);
- Prepared well installation summaries (Appendix B);
- Developed and sampled wells GDW-1, GDW-3, B-2, JJW-1 (Jordan Pit), and GW-3 (Gott Pit);
- Submitted the groundwater samples to Eastern Analytical Inc. for Fe, Mn, and EPH testing in accordance with standard chain-of-custody protocols;
- Reviewed the chemical data (results in Appendix C) in comparison to Maine Drinking Water Exposure Guidelines and EPA Drinking Water Standards;
- Prepared an overburden potentiometric groundwater surface contour map (horizontal flow net) based on water level measurements at the time of sampling (November 24, 2014); and
- Prepared this report.

FIELD INVESTIGATION

Well Installations

S.W.COLE staff observed the drilling and installation of wells GDW-1-2014, GDW-2-2014 and GDW-3-2014 by New England Boring Contractors of Hermon, Maine. Borings were advanced using hollow-stem augers, with the strata logged based on the cuttings from the auger flights. A summary of the strata encountered and well installation details are included as Appendix B.

Monitoring wells B-1, B-2 and B-3 were installed in 1990 for a hydrogeological investigation performed at that time. We understand that these well installations and water level measurements were a requirement for a Site Location of Development

(SLODA) permit. Boring logs and groundwater elevations were reported in an S.W.COLE report dated July 23, 1991. A summary of the well construction details is included in Appendix B.

In May 2014, S.W.COLE installed monitoring well GW-3 on the adjoining property to the northwest (Gott Pit) and monitoring well JJW-1 on the adjoining property to the northeast (Jordan Pit). A summary of the well construction for GW-3 and JJW-1 is included in Appendix B. It should be noted that the drilling method employed to install GW-3 and JJW-1 (using water and steel casing prior to the installation of the PVC well materials and removal of the steel casing) precludes stratigraphic descriptions and accurate estimates of the depth to groundwater during drilling. The screen lengths for these wells were generally selected based on the driller estimates of the depth to groundwater.

Groundwater Sampling

On November 25, 2014, S.W.COLE staff sampled wells GDW-1-2014, GDW-3-2014, B-2, GW-3 (Gott) and JJW-1 (Jordan) in accordance with our Agreement. Prior to sampling, the wells were purged in an effort to remove silt, develop the wells and measure field parameters. The field parameters temperature, pH and specific conductivity were measured periodically during the development/purging of the wells. Well GDW-3-2014 was sampled using modified low-flow sampling methods (peristaltic pump and foot-valve) due to the depth to groundwater being greater than 30 feet below the top of casing. Wells GDW-1, JJW-1 and B-2 were sampled using a foot-valve system only due to the depths to water ranging from 44 to 60 feet. Groundwater sampling field data sheets are included as Appendix C.

Samples collected for Extractable Petroleum Hydrocarbons (EPH), iron (Fe) and manganese (Mn) analyses were submitted to Eastern Analytical Inc of Concord, NH in accordance with chain of custody protocols. Laboratory results for wells GDW-1-2014, GDW-3-2014, B-2, GW-3 (Gott) and JJW-1(Jordan) are included as Appendix D.

Groundwater Elevations

On November 21, 2014, depths to groundwater were measured in GDW-1-2014, GDW-2-2014, GDW-3-2014, B-1, B-2, B-3, GW-3 (Gott Pit) and JJW-1 (Jordan). The depth to water measurements and calculated groundwater elevations are included in Appendix E. Measured depths to groundwater were used with well elevation survey data provided by Herrick & Salsbury, Inc. to prepare an Overburden Potentiometric Surface Map (Sheet 1). Historical groundwater depth and elevation data, dating to May 1990 are included in Appendix E for wells B-1, B-2, and B-3. Groundwater elevations are shown on Sheet 1 in addition to ground surface elevations for each of the wells.

Engineering Dynamics reviewed the 1990 to 2011 groundwater elevations reported for B-1, B-2, and B-3, providing a letter to the Town of Lamoine recommending that the elevations from May 1991 be used for planning excavations in the Pit. In 1991, the highest measured groundwater elevation was 133.3 feet recorded for B-2. It was the recommendation of Engineering Dynamics that this be used as the datum for separation from groundwater.

FINDINGS

Field parameter measurements for GDW-1-2014, GDW-3-2014, B-2 and JJW-1 (Jordan) found the groundwater at these locations to be very turbid (>500 NTU), with only GW-3 (16 NTU) having a turbidity below 100 NTU. The elevated turbidity is interpreted to be related to silty sands at the base of the formation and the use of a foot-valve on tubing for sampling[2]. The field measurements for pH ranged from 5.79 in GW-3 to 7.24 in GDW-3-2014. Specific Conductivity measurements ranged from 0.037 mS/cm in GW-3 to 0.0110 in GDW-3-2014. The field parameters data appear to be consistent with previous sampling in the Lamoine area.

With the exception of C19-C36 aliphatic hydrocarbons detected in JJW-1 (140 µg/L), EPH parameters for JJW-1 and for GDW-1, GDW-3, B-2 and GW-3 were below the laboratory reporting limits for EPH. JJW-1 was the only well that was also sampled in June of 2014, when C19-C36 aliphatics were measured at 130 µg/L. As these levels

[2] The foot-valve and tubing sampling method will tend to agitate the water more during sampling, stirring up any silt that may be present.

are consistent, we interpret this concentration to be a continued low level solubility of heavy petroleum products on the casing materials used for the installation of JJW-1.

The Maine Groundwater and Drinking Water Remediation Guidelines for Petroleum Related Compounds indicate that the maximum acceptable concentration of C19-C36 Aliphatics in groundwater is 10,000 µ/L. The reported concentration for C19-C36 Aliphatics in JJW-1 is more than 70 times below the maximum acceptable concentration.

Iron and manganese concentrations in GDW-1-2014 (100 mg/L and 2.6 mg/L), GDW-3-2014 (130 mg/L and 4.76 mg/L), B-2 (130 mg/L and 4.76 mg/L) and JJW-1 (130 mg/L and 4.76 mg/L) were above the EPA Secondary Drinking Water Standards (SDWS)[3] for iron and manganese (SDWS for iron is0.3 mg/L; SDWS for manganese is 0.05 mg/L). These elevated values are interpreted to be related to the new installation of GDW-1 and GDW-3, as well as the silty nature of the formation and high turbidity associated with the sampling method. It is our interpretation that these elevated metal concentrations will decline as the wells are further developed, the formation stabilizes and with modifications to the sampling procedure (low flow submersible pumps) to reduce the turbidity in the wells.

As shown on Sheet 1, the groundwater flow is generally to the west. This well installation and water quality sampling program was originally planned based on the location of flow divides, as interpreted by the Maine Geological Survey on the Salsbury Cove Sand & Gravel Aquifer Map, dividing the Pit into 3 sections (east, west and south). Sheet 2 shows the flow divides overlaying the existing pit with topographic contours based on pre-excavation topography. The 2014 topographic data posted on the Maine GIS web page is consistent with the site specific survey data, and it appears that the state has removed their flow divide interpretations from the web page. Based on our groundwater elevation data, the original flow divides were interpreted based on the

[3] The EPA established the SDWS as a guideline to assist public water systems in managing their drinking water for aesthetic considerations, such as taste, color and odor. The presence of parameters above these standards is not considered to present a risk to human health.

historical surface topography. The Pit is being operated as an internally drained gravel pit and the groundwater flow is controlled by subsurface stratigraphy and by locations of groundwater infiltration.

Groundwater elevations measured on November 21, 2014 range from a high of 144.69 feet at JJW-1 to a low of 123.40 feet at GDW-3-2014. The maximum November groundwater elevation measured on the Goodwin property is 131.58 feet at B-2. The variation in the elevation between JJW-1 and B-2 (a difference of 13.11 feet) and between Blunts Pond (seasonal high water level ±174 feet) and B-2 (a difference of about 43 feet) is interpreted to indicate hydraulically restrictive sediments (possible perching layer) exist between Blunts Pond and B-2, and between JJW-1 and B-2. The total groundwater elevation change from B-2 to GDW-3-2014 is only 8.18 feet.

The groundwater flow net for the Pit also indicates infiltration in the area south and west of GDW-2-2014. The area south and southwest of GDW-2-2014 includes the lowest elevations within the active Pit, where the elevation is estimated at ±170 feet. Thus, there is 35 to 40 feet of separation (elevation 170 Pit bottom vs 129 feet groundwater elevation at GDW-2-2014 or 133 feet) based on the Engineering Dynamics review.

CONCLUSIONS AND RECOMMENDATIONS

In summary, there are no groundwater divides crossing the Pit and groundwater flow is generally to the west. In addition, our investigation found:

- JJW-1 and Blunts Pond are upgradient to the Pit and are interpreted to be separated from the Pit by a restrictive layer;
- There is more than 35 feet of separation between active Pit operations and the seasonal high water elevation;
- GDW-3-2014 is a representative downgradient well location;
- Groundwater quality testing results of downgradient wells GDW-3-2014 and GW-3 (Gott), side-gradient well GDW-2-2014 and upgradient well B-2 found no petroleum hydrocarbon contamination at the pit margins; and
- Groundwater concentrations for iron and manganese are consistent with site conditions.

Based on these data, it is our interpretation that gravel pit operations to date have not had an adverse impact on the sand and gravel aquifer within the project area. We recommend that depth to groundwater data continue to be collected to confirm depth to groundwater and water quality in accordance with the Town of Lamoine gravel pit Ordnance with the following modifications:

- JJW-1 be eliminated from the groundwater elevation and water quality monitoring for the Pit (continue water quality sampling at GDW-1, GDW-3, B-2 and GW-3 (Gott Pit); and
- At such a time that excavation operations in the northeast quarter of the Pit (property corner A, as shown on Sheet 1) are within 200 feet of corner A, with A base of Pit elevation of about 180 feet, a monitoring well will be installed in that corner to confirm groundwater flow.

If you have any questions, please do not hesitate to contact us. We look forward to assisting you on this project.

Sincerely,

S. W. Cole Engineering, Inc.

STATE OF MAINE
CLIFFORD R. LIPPITT
GE292
GEOLOGIST

Clifford R. Lippitt, C.G.
Senior Geologist

CRL-GWB:crl/slh

P:\2012\12-0437.1 G - Herrick & Salsbury - Lamoine, ME - Goodwin Pits Monitoring wells and sampling - CRL\Reports and Letters\12-0437.1 G Goodwin GW report.doc

LEGEND

126 — EQUAL POTENTIAL CONTOUR

INTERPRETED FLOW DIRECTION

WELLS INCLUDED IN EVALUATION

SAMPLED WELLS 11-25-2014

NOTES:

1. GROUNDWATER HORIZONTAL FLOW NET MAP WAS PREPARED FROM A 1"=150' SCALE PLAN OF THE SITE ENTITLED "THE LAMOINE PIT", PREPARED BY HERRICK & SALSBURY, DATED NOVEMBER 17, 2014.
2. TOPOGRAPHY AND GRAVEL PIT ACTIVITY BOUNDARIES BY HERRICK AND SALSBURY INC. ON THE ABOVE REFERENCED PLAN.
3. BORING LOCATIONS & WELL ELEVATION DATA PROVIDED BY HERRICK & SALSBURY INC. ON THE ABOVE REFERENCED PLAN.
4. POTENTIOMETRIC SURFACE CONTOURS AND GROUNDWATER FLOW DIRECTIONS REPRESENT OUR INTERPRETATION OF CONDITIONS AT THE MONITORING WELLS/PIEZOMETERS IN NOVEMBER 2014. ACTUAL CONDITIONS MAY DIFFER AND CONDITIONS WILL VARY SEASONALLY.

0 150 300 Feet

S.W.COLE ENGINEERING, INC.

HERRICK & SALSBURY, INC.

GROUNDWATER HORIZONTAL FLOW NET

JOHN W. GOODWIN - EAST LAMOINE PIT
GRAVEL PIT MONITORING WELL INSTALLATIONS AND TESTING
LAMOINE, MAINE

Job No.:	12-0437.1	Scale:	1" = 150'
Date :	12/19/2014	Sheet:	1

R:\2012\12-0437.1\CAD\Drawings\12-0437.1 Sheet 1.DWG Plot Date: 12/19/2014 2:20:47 PM, J.L.CLM, S.W. Cole Engineering, Inc.

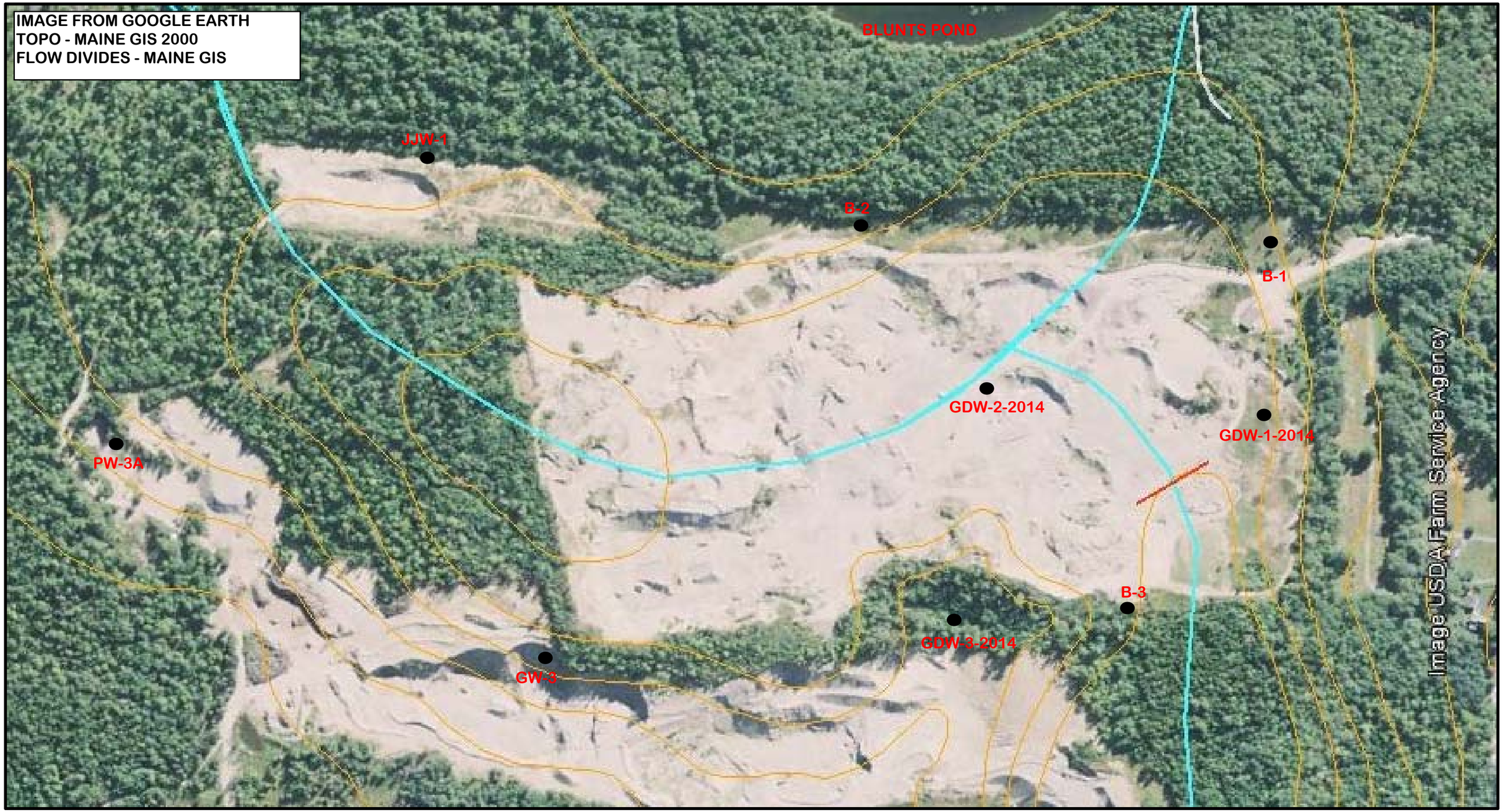

S.W.COLE ENGINEERING, INC.

SHEET 2 - HISTORICAL FLOW DIVIDES
GOODWIN - EAST LAMOINE PIT
LAMOINE MAINE

December 22, 2013

● WELL LOCATIONS APPROXIMATE

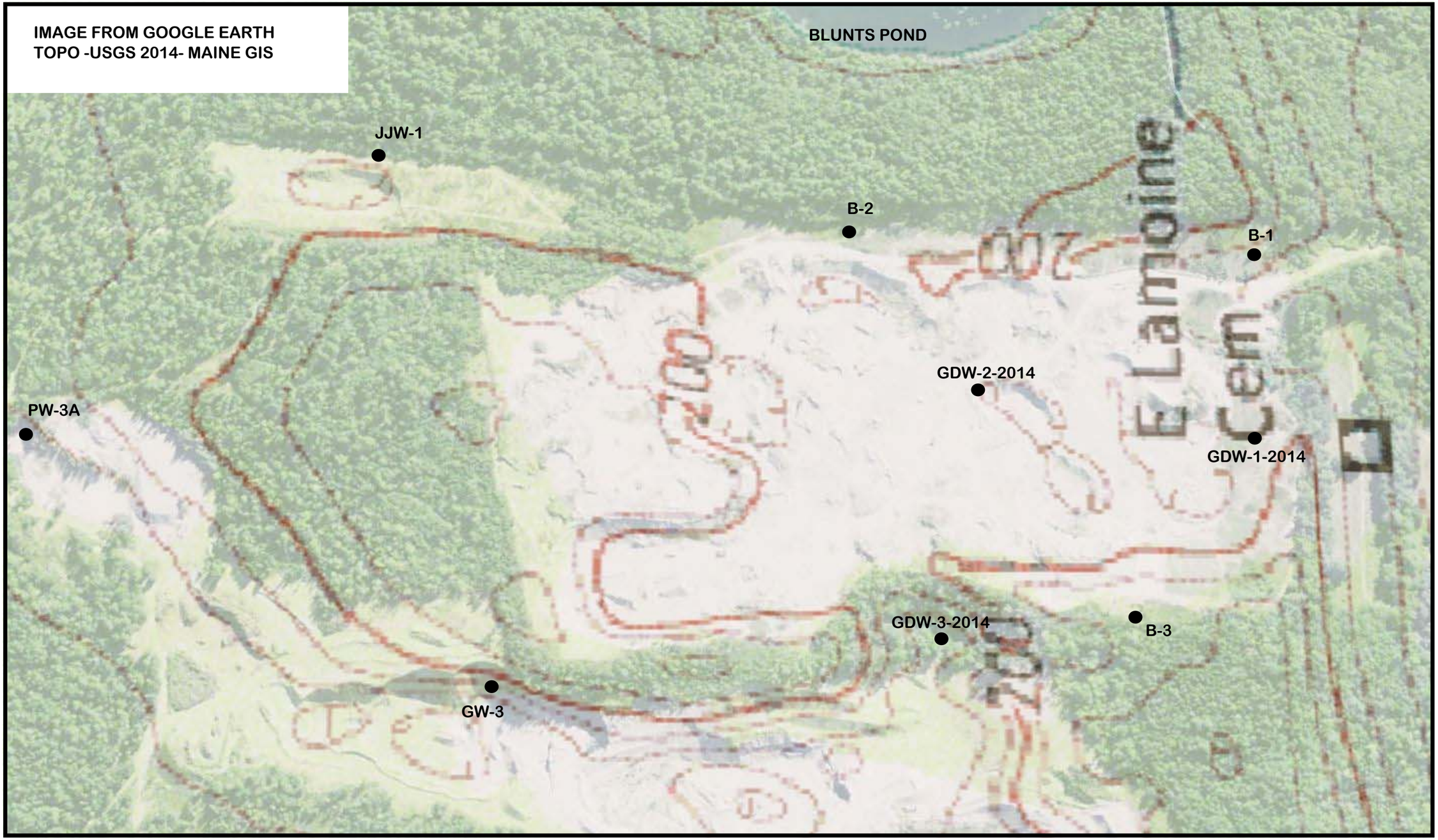

S.W.COLE ENGINEERING, INC.

SHEET 3 - 2014 TOPOGRAPHY
GOODWIN - EAST LAMOINE PIT
LAMOINE MAINE

DECEMBER 22, 2013
● WELL LOCATIONS APPROXIMATE

APPENDIX A

APPENDIX A

Limitations

This report has been prepared for the exclusive use of John W. Goodwin Jr. and Yvonne Marie Goodwin, c/o Herrick & Salsbury, Inc. for specific application to Hydrogeological Services provided for the East Lamoine Pit in Lamoine, Maine, in accordance with generally accepted geologic practices. No warranty, expressed or implied, is made.

The scope of our work has been limited to the items specifically discussed in the text of this report. Recommendations contained in this report are based upon information provided by others regarding the site and on our findings during the fieldwork. Should any additional data or information become available, it should be reviewed by S. W. Cole Engineering, Inc. and the conclusions and recommendations presented in this report should be modified as appropriate.

This report cannot reflect undetected variations that may occur nor can it reflect variations of subsurface conditions (groundwater quality or elevation) over time. S. W. Cole Engineering, Inc. has made no attempt to verify the compliance of the past or present owners and/or occupants of the property with local, state, or federal laws and regulations.

It must be noted that our findings do not represent scientific certainties and are based on professional judgment. S. W. Cole Engineering, Inc. does not represent that the subject site contains no hazardous substances or other latent conditions beyond those detected or observed by S. W. Cole Engineering, Inc.

APPENDIX B

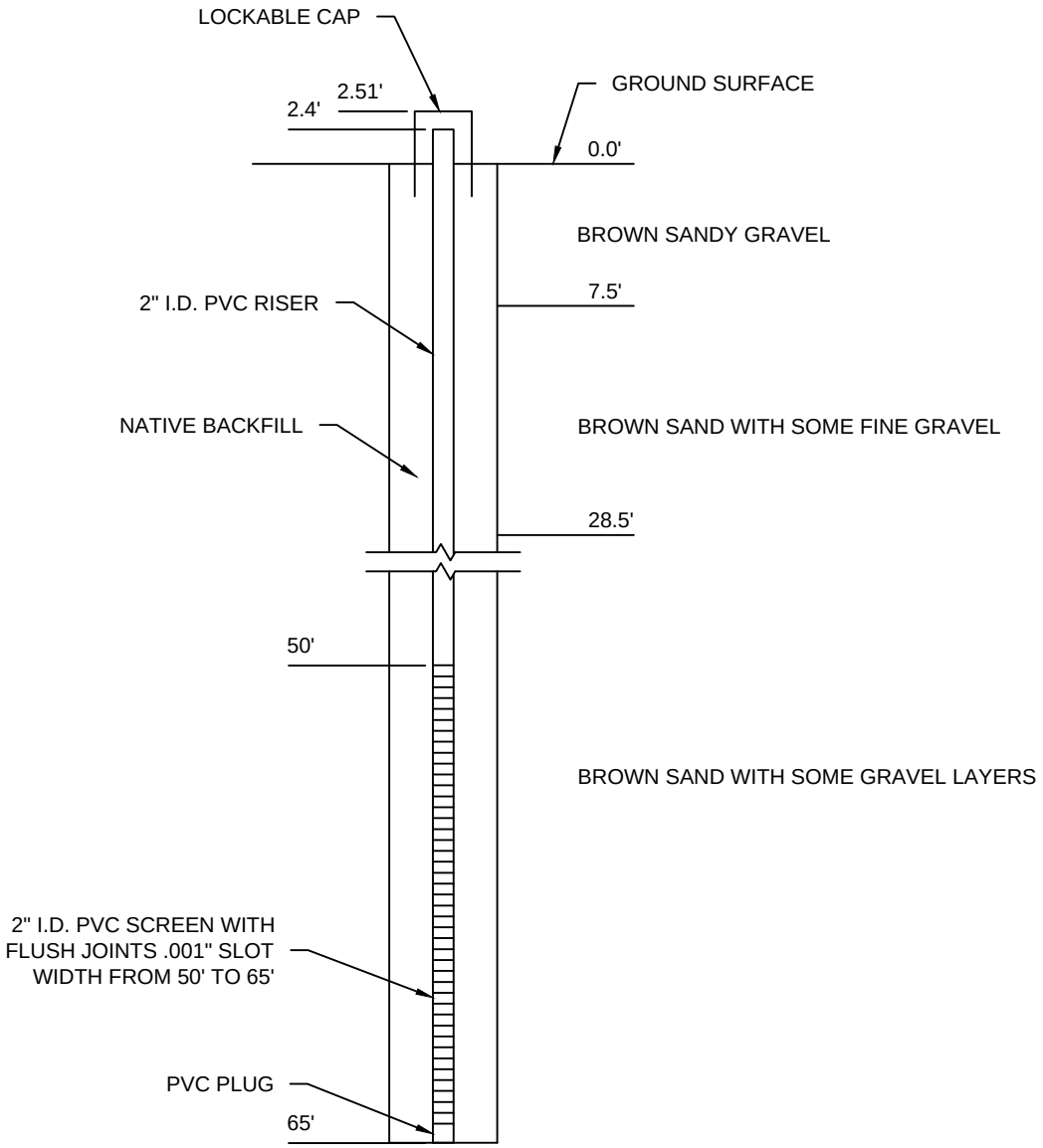

GWD-1-2014

S.W.COLE
ENGINEERING, INC.

HERRICK & SALSBURY

MONITORING WELL INSTALLATION DETAIL

GOODWIN PITS MONITORING WELLS AND SAMPLING
EAST LANDING PIT
LAMOINE, MAINE

Job No.:	12-0437.1	Scale:	Not to Scale
Date :	11/17/2014	Sheet:	1

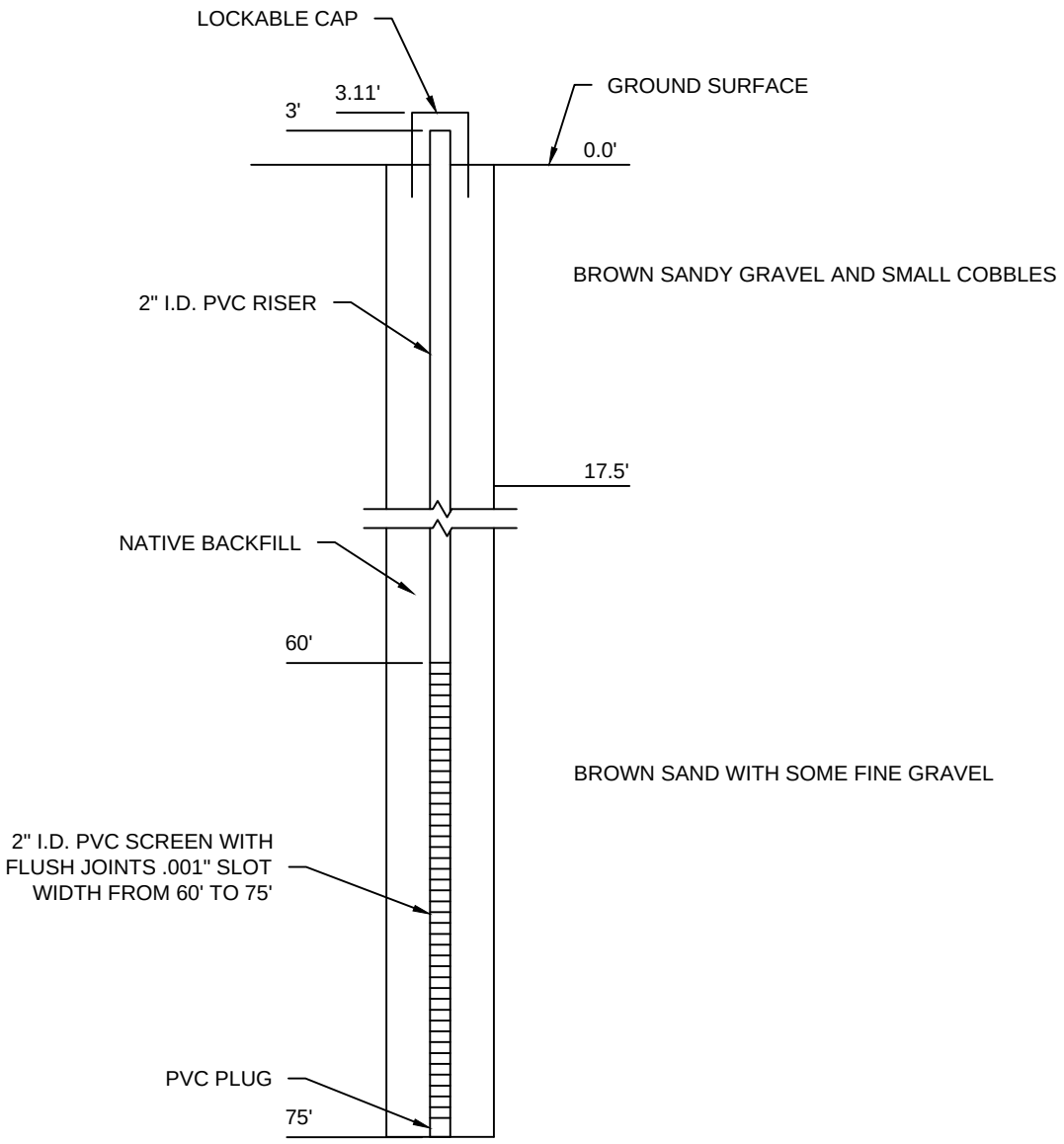

GWD-2-2014

S.W.COLE
ENGINEERING, INC.

HERRICK & SALSBURY

MONITORING WELL INSTALLATION DETAIL

GOODWIN PITS MONITORING WELLS AND SAMPLING
EAST LANDING PIT
LAMOINE, MAINE

Job No.:	12-0437.1	Scale:	Not to Scale
Date :	11/17/2014	Sheet:	2

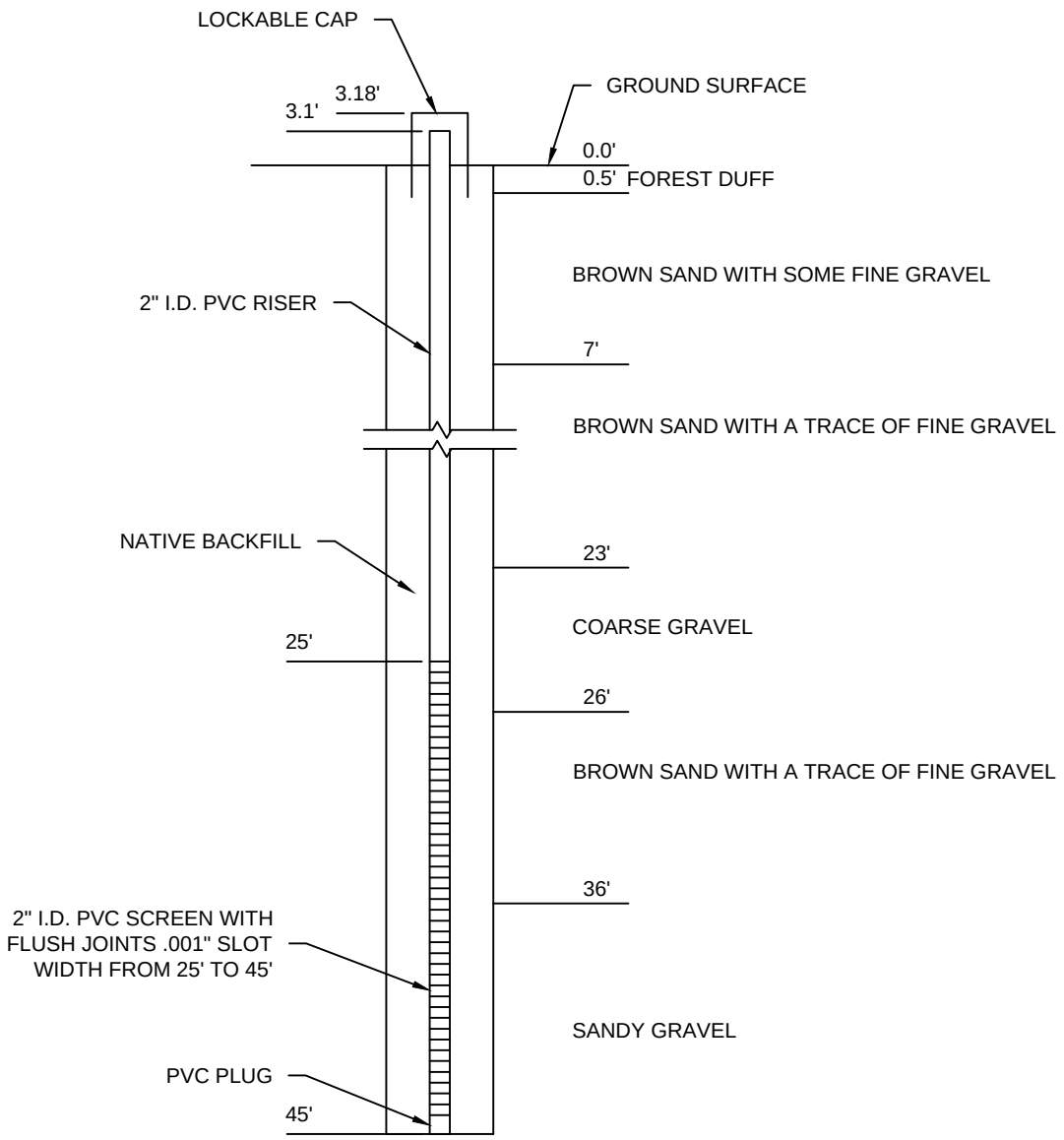

GWD-3-2014

S.W.COLE
ENGINEERING, INC.

HERRICK & SALSBURY

MONITORING WELL INSTALLATION DETAIL

GOODWIN PITS MONITORING WELLS AND SAMPLING
EAST LANDING PIT
LAMOINE, MAINE

Job No.:	12-0437.1	Scale:	Not to Scale
Date :	11/17/2014	Sheet:	3

Monitoring Well Installation Summary
Wells Installed by P.L. Jones & Son, of Ellsworth, ME
May 27 & 28, 2014

GW-3
Drilled with hammer, foam and 6 inch steel casing;
Total drill depth 30 feet;
Stratigraphy: 0-30 feet – brown silty sand (running sands observed);
Steel casing to 28 feet, removed from the hole;
2-inch PVC well materials; 15 feet 0.010 inch slotted screen and 15 feet of riser;
Point of well 28.5 feet bgs;

JJW-1
Drilled with hammer, foam and 6 inch steel casing;
Total drill depth 70 feet;
Stratigraphy: 0-30 feet – brown silty sand (running sands observed);
Steel casing to 28 feet, removed from the hole;
2-inch PVC well materials; 15 feet 0.010 inch slotted screen and 15 feet of riser;
Point of well 28.5 feet bgs;

Monitoring Well Summary
Wells Installed by Maine Test Borings
May 1990

B-1
Drilled with 2.5 inch HSA;
Total depth 41.95 feet;
Stratigraphy: Lower 20 feet, Brown med-fine sand, some silt
¾ in PVC well materials; 10 feet of 0.010 inch slotted screen

B-2
Drilled with 2.5 inch HSA;
Total depth 75.4 feet
Stratigraphy: fine sand, trace silt over silty fine sand
¾ in PVC well materials; 10 feet of 0.010 inch slotted screen

B-3
Drilled with 2.5 inch HSA;
Total depth 111.5 feet;
Stratigraphy: fine sand, gravelly sand, medium sand, trace silt
¾ in PVC well materials; 10 feet of 0.010 inch slotted screen

APPENDIX C

S.W.COLE ENGINEERING, INC.

MONITORING WELL LOW-FLOW SAMPLING DATA

PROJECT NAME Goodwin East Lamoine Gravel Pit - Lamoine, ME NO. 12-0437.1

WELL NUMBER GDW-1-2014
WELL DIAMETER 2.0 IN
WELL DEPTH (AS BUILT) 65.0 FT (BGS)
WELL DEPTH (ANNUAL INSP.) FT (BGS)
SCREEN LENGTH 15.0 FT
RISER HT. (REFERENCE PT) 2.4 FT (AGS)
WELL ELEVATION (RISER TOP) 186.7 FT
STRATUM Sand & Gravel

DATE 11/25/14
AIR TEMP. (°F) ± 50°F
WEATHER CONDTIONS Cloudy

SAMPLING DEVICE ~~Peristaltic w/~~ foot valve
TUBING TYPE LDPE 3/8
INTAKE DEPTH FT (BGS) ± 60 ft
WELL CONDITION New

TIME START PUMPING 13:50
TIME STOP PUMPING 14:20
INITIAL WATER LEVEL 58.30 FT
FINAL WATER LEVEL 58.8 FT
WATER LEVEL @ SAMPLING TIME 58.8 FT
FLOW RATE ±300 ml ~~L~~/MIN
VOLUME PUMPED 3 gall L

SITE CONDITION NOTES
Silted in ± 18 inches during sampling
Stainless steel foot valve lost during sampling

DIRECT READ FIELD INSTRUMENT KL-10
CALIBRATION

TIME	DEPTH TO WATER (FT)	pH	SPEC. COND. (mS/cm)	TURBIDITY (NTU)	TEMP. (°C)	REMARKS
14:00		6.48	0.048	>	10.3	Very silty - 1 gal.
14:05		6.41	0.051	>	10.3	2 gal
14:15	58.8	6.36	0.055	>	10.3	3 gallons.

LABORATORY SAMPLES

SAMPLE NUMBER GDW-1-2014 TIME SAMPLED 14:15
CONTAINER NO. & TYPES 1 - 125 ml plastic bottle, 3 - 40 ml VOA Vials, 2 - 1 liter glass amber bottles
ANALYSES REQUESTED EPH, VPH, Fe, Mn
PRESERVATIVES HCl, HNO3
METHOD OF SHIPMENT UPS Ground
SAMPLER'S NAME (PRINTED) Cliff Lippitt
SAMPLER'S SIGNATURE

OBSERVATIONS

ODOR	
☐ PRESENT	☐ ABSENT
COLOR	
☐ PRESENT	☐ ABSENT
SURFACE SHEEN	
☐ PRESENT	☐ ABSENT

S.W.COLE ENGINEERING, INC.

MONITORING WELL LOW-FLOW SAMPLING DATA

PROJECT NAME Goodwin East Lamoine Gravel Pit - Lamoine, ME NO. 12-0437.1

WELL NUMBER B-2
WELL DIAMETER 0.75 IN
WELL DEPTH (AS BUILT) Unkhown FT (BGS)
WELL DEPTH (ANNUAL INSP.) FT (BGS)
SCREEN LENGTH Unknown FT
RISER HT. (REFERENCE PT) 1.0 FT (AGS)
WELL ELEVATION (RISER TOP) 192.5 FT
STRATUM Sand & Gravel

DATE 11/25/14
AIR TEMP. (°F) 150
WEATHER CONDTIONS Cloudy
SAMPLING DEVICE ~~Peristaltic w/ foot valve~~ Footvalve
TUBING TYPE LDPE
INTAKE DEPTH FT (BGS)
WELL CONDITION

TIME START PUMPING 12:55
TIME STOP PUMPING 13:20
INITIAL WATER LEVEL 61.83 FT
FINAL WATER LEVEL 65.8 FT
WATER LEVEL @ SAMPLING TIME 65.8 FT
FLOW RATE L/MIN
VOLUME PUMPED 2 gal. L

SITE CONDITION NOTES
Solid Bottom -

DIRECT READ FIELD INSTRUMENT Horiba U-10
CALIBRATION

TIME	DEPTH TO WATER (FT)	pH	SPEC. COND. (mS/cm)	TURBIDITY (NTU)	TEMP. (°C)	REMARKS
13:00	—	6.14	0.095	>	10.7	
13:03		6.15	0.097	>	10.6	
13:07		6.15	0.097	>	10.7	
13:11		6.17	0.097	>	10.5	
13:15		6.16	0.097	>	10.5	

LABORATORY SAMPLES

SAMPLE NUMBER B-2 TIME SAMPLED 13:15
CONTAINER NO. & TYPES 1 - 125 ml plastic bottle, 3 - 40 ml VOA Vials, 2 - 1 liter glass amber bottles
ANALYSES REQUESTED EPH, VPH, Fe, Mn
PRESERVATIVES HCl, HNO3
METHOD OF SHIPMENT UPS Ground
SAMPLER'S NAME (PRINTED) Cliff Lappitt
SAMPLER'S SIGNATURE

OBSERVATIONS

ODOR	
☐ PRESENT	☐ ABSENT
COLOR	
☐ PRESENT	☐ ABSENT
SURFACE SHEEN	
☐ PRESENT	☐ ABSENT

S.W.COLE ENGINEERING, INC.

MONITORING WELL LOW-FLOW SAMPLING DATA

PROJECT NAME Goodwin East Lamoine Gravel Pit - Lamoine, ME NO. 12-0437.1

WELL NUMBER JJW-1
WELL DIAMETER 2.0 IN
WELL DEPTH (AS BUILT) 62.9 FT (BGS)
WELL DEPTH (ANNUAL INSP.) FT (BGS)
SCREEN LENGTH 20.0 FT
RISER HT. (REFERENCE PT) 1.2 FT (AGS)
WELL ELEVATION (RISER TOP) 144.9 FT
STRATUM Sand & Gravel

DATE 11/25/14
AIR TEMP. (°F) ± 50° F
WEATHER CONDTIONS Cloudy
SAMPLING DEVICE Peristaltic Pump
TUBING TYPE LDPE
INTAKE DEPTH FT (BGS)
WELL CONDITION

TIME START PUMPING 12:00
TIME STOP PUMPING 12:15
INITIAL WATER LEVEL 45.50 FT PVC
FINAL WATER LEVEL 45.50 FT
WATER LEVEL @ SAMPLING TIME 45.50 FT
FLOW RATE ± 300 mL/MIN
VOLUME PUMPED 3 gall L

SITE CONDITION NOTES
Very silty - Bottom silted in ± 1 ft due Pumping

DIRECT READ FIELD INSTRUMENT
CALIBRATION

TIME	DEPTH TO WATER (FT)	pH	SPEC. COND. (mS/cm)	TURBIDITY (NTU)	TEMP. (°C)	REMARKS
12:05		5.68	0.075	>	9.4	
12:10		5.96	0.080	>	9.1	
12:15		6.13	0.081	>	8.7	

LABORATORY SAMPLES

SAMPLE NUMBER JJW-1 TIME SAMPLED 12:15
CONTAINER NO. & TYPES 1 - 125 ml plastic bottle, 3 - 40 ml VOA Vials, 2 - 1 liter glass amber bottles
ANALYSES REQUESTED EPH, VPH, Fe, Mn
PRESERVATIVES HCl, HNO3
METHOD OF SHIPMENT UPS Ground
SAMPLER'S NAME (PRINTED) Cliff Lappitt
SAMPLER'S SIGNATURE

OBSERVATIONS

ODOR	
☐ PRESENT	☐ ABSENT
COLOR	
☐ PRESENT	☐ ABSENT
SURFACE SHEEN	
☐ PRESENT	☐ ABSENT

S.W.COLE ENGINEERING, INC.

MONITORING WELL LOW-FLOW SAMPLING DATA

PROJECT NAME Goodwin East Lamoine Gravel Pit - Lamoine, ME NO. 12-0437.1

WELL NUMBER GW-3
WELL DIAMETER 2.0 IN
WELL DEPTH (AS BUILT) 28.5 FT (BGS)
WELL DEPTH (ANNUAL INSP.) FT (BGS)
SCREEN LENGTH 15.0 FT
RISER HT. (REFERENCE PT) 3.1 FT (AGS)
WELL ELEVATION (RISER TOP) 144.9 FT
STRATUM Sand & Gravel

DATE 11/25/14
AIR TEMP. (°F) ± 50°F
WEATHER CONDTIONS Cloudy
SAMPLING DEVICE Peristaltic Pump
TUBING TYPE LDPE
INTAKE DEPTH FT (BGS) ± 19'
WELL CONDITION Good

TIME START PUMPING 11:10
TIME STOP PUMPING 11:30
INITIAL WATER LEVEL 21.33 FT
FINAL WATER LEVEL 21.40 FT
WATER LEVEL @ SAMPLING TIME 21.40 FT
FLOW RATE 250 mL/MIN
VOLUME PUMPED ± 1.5 gal

SITE CONDITION NOTES

DIRECT READ FIELD INSTRUMENT
CALIBRATION

TIME	DEPTH TO WATER (FT)	pH	SPEC. COND. (mS/cm)	TURBIDITY (NTU)	TEMP. (°C)	REMARKS
11:15	21.40	5.62	0.042	450	9.5	
11:20	21.40	5.78	0.038	180	9.4	
11:25	21.40	5.80	0.037	45	9.3	
11:30	21.40	5.79	0.037	16	9.3	

LABORATORY SAMPLES

SAMPLE NUMBER GW-3 TIME SAMPLED 11:30
CONTAINER NO. & TYPES 1 - 125 ml plastic bottle, 3 - 40 ml VOA Vials, 2 - 1 liter glass amber bottles
ANALYSES REQUESTED EPH, VPH, Fe, Mn
PRESERVATIVES HCl, HNO3
METHOD OF SHIPMENT UPS Ground
SAMPLER'S NAME (PRINTED) Cliff Lappitt
SAMPLER'S SIGNATURE

OBSERVATIONS

ODOR	
☐ PRESENT	☐ ABSENT
COLOR	
☐ PRESENT	☐ ABSENT
SURFACE SHEEN	
☐ PRESENT	☐ ABSENT

S.W.COLE ENGINEERING, INC.

MONITORING WELL LOW-FLOW SAMPLING DATA

PROJECT NAME Goodwin East Lamoine Gravel Pit - Lamoine, ME NO. 12-0437.1

WELL NUMBER GDW-3-2014
WELL DIAMETER 2.0 IN
WELL DEPTH (AS BUILT) 45.0 FT (BGS)
WELL DEPTH (ANNUAL INSP.) FT (BGS)
SCREEN LENGTH 20.0 FT
RISER HT. (REFERENCE PT) 3.1 FT (AGS)
WELL ELEVATION (RISER TOP) 159.1 FT
STRATUM Sand & Gravel

DATE 11/25/14
AIR TEMP. (°F) ± 50°F
WEATHER CONDTIONS Cloudy
SAMPLING DEVICE Peristaltic w/ foot valve
TUBING TYPE LDPE
INTAKE DEPTH FT (BGS)
WELL CONDITION New

TIME START PUMPING 10:10
TIME STOP PUMPING 10:35
INITIAL WATER LEVEL 35.73 FT BTPVC
FINAL WATER LEVEL 35.75 FT
WATER LEVEL @ SAMPLING TIME 35.75 FT
FLOW RATE ±300 L/MIN
VOLUME PUMPED 1.5 gal L ±6 L

SITE CONDITION NOTES
Silty well.

DIRECT READ FIELD INSTRUMENT
CALIBRATION

TIME	DEPTH TO WATER (FT)	pH	SPEC. COND. (mS/cm)	TURBIDITY (NTU)	TEMP. (°C)	REMARKS
10:15	37.78	7.42	0.111	>500	9.8°C	Foot valve to peristaltic
10:21		7.32	0.111	>	9.4°C	
10:28		7.24	0.110	>	9.3	
10:33	37.75	7.24	0.110		9.3	* Turbid.

LABORATORY SAMPLES

SAMPLE NUMBER GDW-3-2014 TIME SAMPLED 10:33
CONTAINER NO. & TYPES 1 - 125 ml plastic bottle, 3 - 40 ml VOA Vials, 2 - 1 liter glass amber bottles
ANALYSES REQUESTED EPH, VPH, Fe, Mn
PRESERVATIVES HCl, HNO3
METHOD OF SHIPMENT UPS Ground
SAMPLER'S NAME (PRINTED) C.R. Liggitt
SAMPLER'S SIGNATURE

OBSERVATIONS

ODOR	
☐ PRESENT	☐ ABSENT
COLOR	
☐ PRESENT	☐ ABSENT
SURFACE SHEEN	
☐ PRESENT	☐ ABSENT

APPENDIX D

Eastern Analytical, Inc.

professional laboratory & drilling services

Clifford R. Lippitt
SW Cole Engineering Inc (B)
37 Liberty Drive
Bangor , ME 04401-5784

ACCREDITED IN ACCORDANCE WITH nelac

Subject: Laboratory Report

Eastern Analytical, Inc. ID:	138578
Client Identification:	12-0437.1
Date Received:	12/2/2014

Dear Mr. Lippitt :

Enclosed please find the laboratory report for the above identified project. All analyses were performed in accordance with our QA/QC Program. Unless otherwise stated, holding times, preservation techniques, container types, and sample conditions adhered to EPA Protocol. Samples which were collected by Eastern Analytical, Inc. (EAI) were collected in accordance with approved EPA procedures. Eastern Analytical, Inc. certifies that the enclosed test results meet all requirements of NELAP and other applicable state certifications. Please refer to our website at www.eailabs.com for a copy of our NELAP certificate and accredited parameters.

The following standard abbreviations and conventions apply to all EAI reports:

Solid samples are reported on a dry weight basis, unless otherwise noted
< : "less than" followed by the reporting limit
> : "greater than" followed by the reporting limit
%R : % Recovery

Eastern Analytical Inc. maintains certification in the following states: Connecticut (PH-0492), Maine (NH005), Massachusetts (M-NH005), New Hampshire/NELAP (1012), Rhode Island (269) and Vermont (VT1012).

The following information is contained within this report: Sample Conditions summary, Analytical Results/Data, Quality Control data (if requested) and copies of the Chain of Custody. This report may not be reproduced except in full, without the the written approval of the laboratory.

If you have any questions regarding the results contained within, please feel free to directly contact me or the chemist(s) who performed the testing in question. Unless otherwise requested, we will dispose of the sample(s) 30 days from the sample receipt date.

We appreciate this opportunity to be of service and look forward to your continued patronage.

Sincerely,

Michael Swett for
Lorraine Olashaw, Lab Director

12/9/14
Date

8
# of pages (excluding cover letter)

SAMPLE CONDITIONS PAGE

EAI ID#: **138578**

Client: **SW Cole Engineering Inc (B)**

Client Designation: **12-0437.1**

Temperature upon receipt (°C): 7

Acceptable temperature range (°C): 0-6

Received on ice or cold packs (Yes/No): Y

Lab ID	Sample ID	Date Received	Date Sampled	Sample Matrix	% Dry Weight	Exceptions/Comments (other than thermal preservation)
138578.01	GDW-3-2014	12/2/14	11/25/14	aqueous		Adheres to Sample Acceptance Policy
138578.02	GW-3	12/2/14	11/25/14	aqueous		Adheres to Sample Acceptance Policy
138578.03	JJW-1	12/2/14	11/25/14	aqueous		Adheres to Sample Acceptance Policy
138578.04	B-2	12/2/14	11/25/14	aqueous		Adheres to Sample Acceptance Policy
138578.05	GWD-1-1014	12/2/14	11/25/14	aqueous		Adheres to Sample Acceptance Policy

Samples were properly preserved and the pH measured when applicable unless otherwise noted. Analysis of solids for pH, Flashpoint, Ignitibility, Paint Filter, Corrosivity, Conductivity and Specific Gravity are reported on an "as received" basis.
Immediate analyses, pH, Total Residual Chlorine, Dissolved Oxygen and Sulfite, performed at the laboratory were run outside of the recommended 15 minute hold time.

All results contained in this report relate only to the above listed samples.

References include:

1) EPA 600/4-79-020, 1983
2) Standard Methods for Examination of Water and Wastewater,20th Edition, 1998 and 22nd Edition, 2012
3) Test Methods for Evaluating Solid Waste SW 846 3rd Edition including updates IVA and IVB
4) Hach Water Analysis Handbook, 2nd edition, 1992

Eastern Analytical, Inc. www.eailabs.com | 800.287.0525 | customerservice@eailabs.com

LABORATORY REPORT

EAI ID#: **138578**

Client: **SW Cole Engineering Inc (B)**

Client Designation: **12-0437.1**

Client Sample ID:	GDW-3-2014
Lab Sample ID:	138578.01
Matrix:	aqueous
Date Sampled:	11/25/14
Date Received:	12/2/14
Date Prepared:	12/2/14

	Result	RL	Dilution Factor	Units	Date Analyzed	Method	Analyst
Naphthalene	< 2	2	1	ug/l	12/3/14	MA EPH	AR
2-Methylnaphthalene	< 2	2	1	ug/l	12/3/14	MA EPH	AR
Acenaphthylene	< 2	2	1	ug/l	12/3/14	MA EPH	AR
Acenaphthene	< 2	2	1	ug/l	12/3/14	MA EPH	AR
Fluorene	< 2	2	1	ug/l	12/3/14	MA EPH	AR
Phenanthrene	< 2	2	1	ug/l	12/3/14	MA EPH	AR
Anthracene	< 2	2	1	ug/l	12/3/14	MA EPH	AR
Fluoranthene	< 2	2	1	ug/l	12/3/14	MA EPH	AR
Pyrene	< 2	2	1	ug/l	12/3/14	MA EPH	AR
Benzo[a]anthracene	< 2	2	1	ug/l	12/3/14	MA EPH	AR
Chrysene	< 2	2	1	ug/l	12/3/14	MA EPH	AR
Benzo[b]fluoranthene	< 2	2	1	ug/l	12/3/14	MA EPH	AR
Benzo[k]fluoranthene	< 2	2	1	ug/l	12/3/14	MA EPH	AR
Benzo[a]pyrene	< 2	2	1	ug/l	12/3/14	MA EPH	AR
Indeno[1,2,3-cd]pyrene	< 2	2	1	ug/l	12/3/14	MA EPH	AR
Dibenz[a,h]anthracene	< 2	2	1	ug/l	12/3/14	MA EPH	AR
Benzo[g,h,i]perylene	< 2	2	1	ug/l	12/3/14	MA EPH	AR
C9-C18 Aliphatic Hydrocarbons	< 100	100	1	ug/l	12/3/14	MA EPH	AR
C19-C36 Aliphatic Hydrocarbons	< 100	100	1	ug/l	12/3/14	MA EPH	AR
C11-C22 Aromatic Hydrocarbons	< 100	100	1	ug/l		MA EPH	AR
C11-C22 Aromatic (Unadjusted)	< 100	100	1	ug/l	12/3/14	MA EPH	AR
1-Chlorooctadecane (surr)	**53 %R**			%	12/3/14	MA EPH	AR
o-Terphenyl (surr)	**89 %R**			%	12/3/14	MA EPH	AR
2-Fluorobiphenyl (surr)	**88 %R**			%	12/3/14	MA EPH	AR
2-Bromonaphthalene (surr)	**91 %R**			%	12/3/14	MA EPH	AR

EPH Surrogate Acceptance Range: 40-140%
Hydrocarbon range data exclude concentrations of any surrogate(s) and internal standards eluting in that range.
C11-C22 Aromatic Hydrocarbons exclude the concentration of Target PAH analytes.
Solid samples prepared in accordance with EPA Method 3545A.
Aqueous samples prepared in accordance with EPA Method 3510C.

LABORATORY REPORT

EAI ID#: **138578**

Client: **SW Cole Engineering Inc (B)**

Client Designation: **12-0437.1**

Client Sample ID:	GW-3
Lab Sample ID:	138578.02
Matrix:	aqueous
Date Sampled:	11/25/14
Date Received:	12/2/14
Date Prepared:	12/2/14

	Result	RL	Dilution Factor	Units	Date Analyzed	Method	Analyst
Naphthalene	< 2	2	1	ug/l	12/3/14	MA EPH	AR
2-Methylnaphthalene	< 2	2	1	ug/l	12/3/14	MA EPH	AR
Acenaphthylene	< 2	2	1	ug/l	12/3/14	MA EPH	AR
Acenaphthene	< 2	2	1	ug/l	12/3/14	MA EPH	AR
Fluorene	< 2	2	1	ug/l	12/3/14	MA EPH	AR
Phenanthrene	< 2	2	1	ug/l	12/3/14	MA EPH	AR
Anthracene	< 2	2	1	ug/l	12/3/14	MA EPH	AR
Fluoranthene	< 2	2	1	ug/l	12/3/14	MA EPH	AR
Pyrene	< 2	2	1	ug/l	12/3/14	MA EPH	AR
Benzo[a]anthracene	< 2	2	1	ug/l	12/3/14	MA EPH	AR
Chrysene	< 2	2	1	ug/l	12/3/14	MA EPH	AR
Benzo[b]fluoranthene	< 2	2	1	ug/l	12/3/14	MA EPH	AR
Benzo[k]fluoranthene	< 2	2	1	ug/l	12/3/14	MA EPH	AR
Benzo[a]pyrene	< 2	2	1	ug/l	12/3/14	MA EPH	AR
Indeno[1,2,3-cd]pyrene	< 2	2	1	ug/l	12/3/14	MA EPH	AR
Dibenz[a,h]anthracene	< 2	2	1	ug/l	12/3/14	MA EPH	AR
Benzo[g,h,i]perylene	< 2	2	1	ug/l	12/3/14	MA EPH	AR
C9-C18 Aliphatic Hydrocarbons	< 100	100	1	ug/l	12/3/14	MA EPH	AR
C19-C36 Aliphatic Hydrocarbons	< 100	100	1	ug/l	12/3/14	MA EPH	AR
C11-C22 Aromatic Hydrocarbons	< 100	100	1	ug/l		MA EPH	AR
C11-C22 Aromatic (Unadjusted)	< 100	100	1	ug/l	12/3/14	MA EPH	AR
1-Chlorooctadecane (surr)	**72 %R**			%	12/3/14	MA EPH	AR
o-Terphenyl (surr)	**92 %R**			%	12/3/14	MA EPH	AR
2-Fluorobiphenyl (surr)	**91 %R**			%	12/3/14	MA EPH	AR
2-Bromonaphthalene (surr)	**90 %R**			%	12/3/14	MA EPH	AR

EPH Surrogate Acceptance Range: 40-140%
Hydrocarbon range data exclude concentrations of any surrogate(s) and internal standards eluting in that range.
C11-C22 Aromatic Hydrocarbons exclude the concentration of Target PAH analytes.
Solid samples prepared in accordance with EPA Method 3545A.
Aqueous samples prepared in accordance with EPA Method 3510C.

LABORATORY REPORT

EAI ID#: **138578**

Client: **SW Cole Engineering Inc (B)**

Client Designation: **12-0437.1**

Client Sample ID:	JJW-1
Lab Sample ID:	138578.03
Matrix:	aqueous
Date Sampled:	11/25/14
Date Received:	12/2/14
Date Prepared:	12/2/14

	Result	RL	Dilution Factor	Units	Date Analyzed	Method	Analyst
Naphthalene	< 2	2	1	ug/l	12/3/14	MA EPH	AR
2-Methylnaphthalene	< 2	2	1	ug/l	12/3/14	MA EPH	AR
Acenaphthylene	< 2	2	1	ug/l	12/3/14	MA EPH	AR
Acenaphthene	< 2	2	1	ug/l	12/3/14	MA EPH	AR
Fluorene	< 2	2	1	ug/l	12/3/14	MA EPH	AR
Phenanthrene	< 2	2	1	ug/l	12/3/14	MA EPH	AR
Anthracene	< 2	2	1	ug/l	12/3/14	MA EPH	AR
Fluoranthene	< 2	2	1	ug/l	12/3/14	MA EPH	AR
Pyrene	< 2	2	1	ug/l	12/3/14	MA EPH	AR
Benzo[a]anthracene	< 2	2	1	ug/l	12/3/14	MA EPH	AR
Chrysene	< 2	2	1	ug/l	12/3/14	MA EPH	AR
Benzo[b]fluoranthene	< 2	2	1	ug/l	12/3/14	MA EPH	AR
Benzo[k]fluoranthene	< 2	2	1	ug/l	12/3/14	MA EPH	AR
Benzo[a]pyrene	< 2	2	1	ug/l	12/3/14	MA EPH	AR
Indeno[1,2,3-cd]pyrene	< 2	2	1	ug/l	12/3/14	MA EPH	AR
Dibenz[a,h]anthracene	< 2	2	1	ug/l	12/3/14	MA EPH	AR
Benzo[g,h,i]perylene	< 2	2	1	ug/l	12/3/14	MA EPH	AR
C9-C18 Aliphatic Hydrocarbons	< 100	100	1	ug/l	12/3/14	MA EPH	AR
C19-C36 Aliphatic Hydrocarbons	**140**	100	1	ug/l	12/3/14	MA EPH	AR
C11-C22 Aromatic Hydrocarbons	< 100	100	1	ug/l		MA EPH	AR
C11-C22 Aromatic (Unadjusted)	< 100	100	1	ug/l	12/3/14	MA EPH	AR
1-Chlorooctadecane (surr)	**11 %R**			%	12/3/14	MA EPH	AR
o-Terphenyl (surr)	**74 %R**			%	12/3/14	MA EPH	AR
2-Fluorobiphenyl (surr)	**92 %R**			%	12/3/14	MA EPH	AR
2-Bromonaphthalene (surr)	**89 %R**			%	12/3/14	MA EPH	AR

EPH Surrogate Acceptance Range: 40-140%
Hydrocarbon range data exclude concentrations of any surrogate(s) and internal standards eluting in that range.
C11-C22 Aromatic Hydrocarbons exclude the concentration of Target PAH analytes.
Solid samples prepared in accordance with EPA Method 3545A.
Aqueous samples prepared in accordance with EPA Method 3510C.

The extraction surrogate 1-Chlorooctadecane exhibited recovery below acceptance limits. The sample was re-analyzed to confirm results.

LABORATORY REPORT

EAI ID#: **138578**

Client: **SW Cole Engineering Inc (B)**

Client Designation: **12-0437.1**

Client Sample ID:	B-2
Lab Sample ID:	138578.04
Matrix:	aqueous
Date Sampled:	11/25/14
Date Received:	12/2/14
Date Prepared:	12/2/14

	Result	RL	Dilution Factor	Units	Date Analyzed	Method	Analyst
Naphthalene	< 2	2	1	ug/l	12/3/14	MA EPH	AR
2-Methylnaphthalene	< 2	2	1	ug/l	12/3/14	MA EPH	AR
Acenaphthylene	< 2	2	1	ug/l	12/3/14	MA EPH	AR
Acenaphthene	< 2	2	1	ug/l	12/3/14	MA EPH	AR
Fluorene	< 2	2	1	ug/l	12/3/14	MA EPH	AR
Phenanthrene	< 2	2	1	ug/l	12/3/14	MA EPH	AR
Anthracene	< 2	2	1	ug/l	12/3/14	MA EPH	AR
Fluoranthene	< 2	2	1	ug/l	12/3/14	MA EPH	AR
Pyrene	< 2	2	1	ug/l	12/3/14	MA EPH	AR
Benzo[a]anthracene	< 2	2	1	ug/l	12/3/14	MA EPH	AR
Chrysene	< 2	2	1	ug/l	12/3/14	MA EPH	AR
Benzo[b]fluoranthene	< 2	2	1	ug/l	12/3/14	MA EPH	AR
Benzo[k]fluoranthene	< 2	2	1	ug/l	12/3/14	MA EPH	AR
Benzo[a]pyrene	< 2	2	1	ug/l	12/3/14	MA EPH	AR
Indeno[1,2,3-cd]pyrene	< 2	2	1	ug/l	12/3/14	MA EPH	AR
Dibenz[a,h]anthracene	< 2	2	1	ug/l	12/3/14	MA EPH	AR
Benzo[g,h,i]perylene	< 2	2	1	ug/l	12/3/14	MA EPH	AR
C9-C18 Aliphatic Hydrocarbons	< 100	100	1	ug/l	12/3/14	MA EPH	AR
C19-C36 Aliphatic Hydrocarbons	< 100	100	1	ug/l	12/3/14	MA EPH	AR
C11-C22 Aromatic Hydrocarbons	< 100	100	1	ug/l		MA EPH	AR
C11-C22 Aromatic (Unadjusted)	< 100	100	1	ug/l	12/3/14	MA EPH	AR
1-Chlorooctadecane (surr)	**30 %R**			%	12/3/14	MA EPH	AR
o-Terphenyl (surr)	**89 %R**			%	12/3/14	MA EPH	AR
2-Fluorobiphenyl (surr)	**87 %R**			%	12/3/14	MA EPH	AR
2-Bromonaphthalene (surr)	**87 %R**			%	12/3/14	MA EPH	AR

EPH Surrogate Acceptance Range: 40-140%
Hydrocarbon range data exclude concentrations of any surrogate(s) and internal standards eluting in that range.
C11-C22 Aromatic Hydrocarbons exclude the concentration of Target PAH analytes.
Solid samples prepared in accordance with EPA Method 3545A.
Aqueous samples prepared in accordance with EPA Method 3510C.

The extraction surrogate 1-Chlorooctadecane exhibited recovery below acceptance limits. The sample was re-analyzed to confirm results.

LABORATORY REPORT

EAI ID#: **138578**

Client: **SW Cole Engineering Inc (B)**

Client Designation: **12-0437.1**

Client Sample ID:	GWD-1-1014
Lab Sample ID:	138578.05
Matrix:	aqueous
Date Sampled:	11/25/14
Date Received:	12/2/14
Date Prepared:	12/2/14

	Result	RL	Dilution Factor	Units	Date Analyzed	Method	Analyst
Naphthalene	< 2	2	1	ug/l	12/3/14	MA EPH	AR
2-Methylnaphthalene	< 2	2	1	ug/l	12/3/14	MA EPH	AR
Acenaphthylene	< 2	2	1	ug/l	12/3/14	MA EPH	AR
Acenaphthene	< 2	2	1	ug/l	12/3/14	MA EPH	AR
Fluorene	< 2	2	1	ug/l	12/3/14	MA EPH	AR
Phenanthrene	< 2	2	1	ug/l	12/3/14	MA EPH	AR
Anthracene	< 2	2	1	ug/l	12/3/14	MA EPH	AR
Fluoranthene	< 2	2	1	ug/l	12/3/14	MA EPH	AR
Pyrene	< 2	2	1	ug/l	12/3/14	MA EPH	AR
Benzo[a]anthracene	< 2	2	1	ug/l	12/3/14	MA EPH	AR
Chrysene	< 2	2	1	ug/l	12/3/14	MA EPH	AR
Benzo[b]fluoranthene	< 2	2	1	ug/l	12/3/14	MA EPH	AR
Benzo[k]fluoranthene	< 2	2	1	ug/l	12/3/14	MA EPH	AR
Benzo[a]pyrene	< 2	2	1	ug/l	12/3/14	MA EPH	AR
Indeno[1,2,3-cd]pyrene	< 2	2	1	ug/l	12/3/14	MA EPH	AR
Dibenz[a,h]anthracene	< 2	2	1	ug/l	12/3/14	MA EPH	AR
Benzo[g,h,i]perylene	< 2	2	1	ug/l	12/3/14	MA EPH	AR
C9-C18 Aliphatic Hydrocarbons	< 100	100	1	ug/l	12/3/14	MA EPH	AR
C19-C36 Aliphatic Hydrocarbons	< 100	100	1	ug/l	12/3/14	MA EPH	AR
C11-C22 Aromatic Hydrocarbons	< 100	100	1	ug/l		MA EPH	AR
C11-C22 Aromatic (Unadjusted)	< 100	100	1	ug/l	12/3/14	MA EPH	AR
1-Chlorooctadecane (surr)	**44 %R**			%	12/3/14	MA EPH	AR
o-Terphenyl (surr)	**87 %R**			%	12/3/14	MA EPH	AR
2-Fluorobiphenyl (surr)	**92 %R**			%	12/3/14	MA EPH	AR
2-Bromonaphthalene (surr)	**90 %R**			%	12/3/14	MA EPH	AR

EPH Surrogate Acceptance Range: 40-140%
Hydrocarbon range data exclude concentrations of any surrogate(s) and internal standards eluting in that range.
C11-C22 Aromatic Hydrocarbons exclude the concentration of Target PAH analytes.
Solid samples prepared in accordance with EPA Method 3545A.
Aqueous samples prepared in accordance with EPA Method 3510C.

LABORATORY REPORT

EAI ID#: **138578**

Client: **SW Cole Engineering Inc (B)**

Client Designation: **12-0437.1**

Sample ID:	GDW-3-2014	GW-3	JJW-1	B-2					
Lab Sample ID:	138578.01	138578.02	138578.03	138578.04					
Matrix:	aqueous	aqueous	aqueous	aqueous					
Date Sampled:	11/25/14	11/25/14	11/25/14	11/25/14	**Analytical Matrix**	**Units**	**Date of Analysis**	**Method**	**Analyst**
Date Received:	12/2/14	12/2/14	12/2/14	12/2/14					
Iron	**180**	**0.54**	**1600**	**68**	AqTot	mg/L	12/3/14	200.8	DS
Manganese	**14**	**0.015**	**27**	**0.56**	AqTot	mg/L	12/3/14	200.8	DS

Sample ID:	GWD-1-1014					
Lab Sample ID:	138578.05					
Matrix:	aqueous					
Date Sampled:	11/25/14	**Analytical Matrix**	**Units**	**Date of Analysis**	**Method**	**Analyst**
Date Received:	12/2/14					
Iron	**510**	AqTot	mg/L	12/3/14	200.8	DS
Manganese	**15**	AqTot	mg/L	12/3/14	200.8	DS

Page _____ of _____

Chain-of-Custody Record

138578 — 8

Bold Fields Required. Please Circle Requested Analysis.

Sample I.D.	Sampling Date/Time *If Composite, Indicate Both Start & Finish Date/Time	Matrix (see below)	Grab/*Composite	VOC: 524.2 BTEX 524.2 MTBE only	VOC: 8260B 624 VOCs 1, 4 Dioxane	VOC: 8021B BTEX Halos	VOC: 8015B GRO MAVPH	SVOC: 8270D 625 SVOCs EDB DBCP ABN A BN PAH	SVOC: TPH8100 L1 L2	SVOC: 8015B DRO MAEPH	SVOC: PEST 608 PCB 608 PEST 8081A PCB 8082	SVOC: Oil & Grease 1664 TPH 1664	TCLP: TCLP 1311 ABN Metals VOC Pest Herb	Metals: Dissolved Metals (List Below)	Metals: Total Metals (List Below)	Inorganics: TS TSS TDS Spec. Con.	Inorganics: Br Cl F SO_4 NO_2 NO_3 NO_2NO_2	Inorganics: BOD CBOD T. Alk.	Inorganics: TKN NH_3 T. Phos. O. Phos.	Inorganics: pH T. Res. Chlorine	Inorganics: COD Phenols TOC DOC	Inorganics: Total Cyanide Total Sulfide	Inorganics: Reactive Cyanide Reactive Sulfide Flashpoint Ignitability	Micro: Total Coliform E. Coli Fecal Coliform	Micro: Enterococci Heterotrophic Plate Count	Other	Other	Other	# of Containers	Notes MeOH Vial #
GDW-3-2014	11/25/14 10:33	GW	G							X					X														2	
GW-3	11:30																												2	
JJW-1	12:15																												2	
B-2	13:15																												2	
GWD-1-2014	14:15																												2	
									12 Amber HCl						250 ml HDPE N															

Matrix: A-Air; S-Soil; GW-Ground Water; SW-Surface Water; DW-Drinking Water; WW-Waste water

Preservative: H-HCl; N-HNO_3; S-H_2SO_4; Na-NaOH; M-MEOH

Project Manager: Clifford R. Lippitt

Company: S. W. Cole Engineering, Inc

Address: 37 Liberty Drive

City: Bangor **State:** ME **Zip:** 04401

Phone: 207) 848-5714 **Ext.:** 6030

Fax:

E-Mail: clippitt@swcole.com

Site Name: 12L0437.1

Project #:

State: NH MA (ME) VT **Other:**

Regulatory Program: NPDES: RGP POTW Stormwater or GWP, Oil Fund, Brownfield or Other:

Quote #: **PO #:**

Date Needed: STD TAT (Dec 17)

QA/QC Reporting Level

A B C

OR

Presumptive Certainty

Reporting Options

Prelims: Yes or No

If Yes: Fax or PDF

Electronic Options

No Fax E-Mail PDF Equis

Temp. 7 °C

Ice? (Yes) No

Sampler(s): CR. Lippitt

Relinquished By: UPS **Date:** 12/1/14 **Time:** 15:00 **Received By:** Slippe E.

Relinquished By: **Date:** 12/2/14 **Time:** 1020 **Received By:** Jim Johnson

Relinquished By: **Date:** **Time:** **Received By:**

Metals: 8 RCRA 13 PP (Fe, Mn) Pb, Cu

Other Metals:

Samples Field Filtered? ☐ Yes ☐ No

Notes: (ie: Special Detection Limits, Billing Info, If Different)

* 1 Amber Glass was Broken in shipment - Replaced w/ similar preserved from stock.

Site History: Gravel Pit.

Suspected Contamination: None.

Field Readings: No -

Eastern Analytical, Inc.
professional laboratory & drilling services
25 Chenell Drive | Concord, NH 03301 | Tel: 603.228.0525 | 1.800.287.0525 | Fax: 603.228.4591 | E-Mail: customerservice@eailabs.com | www.eailabs.com

(White: Original Green: Project Manager)

APPENDIX E

GROUNDWATER ELEVATIONS TABLE

John Goodwin, Jr.

East Lamoine Gravel Pit

		Groundwater Observation Locations & Elevations							
		B-1	**B-2**	**B-3**	**GDW-1-2014**	**GDW-2-2014**	**GDW-3-2014**	**GW-3**	**JJW-1**
Ground Elevation.		**167.46**	**192.20**	**230.27**	**184.10**	**190.60**	**156.10**	**141.80**	**189.20**
Standpipe Elevation		**171.26**	**192.51**	**233.67**	**186.81**	**193.29**	**159.15**	**144.90**	**190.24**
Sampling Dates	05/03/90	131.91	131.50	126.67					
	05/17/90	132.01	132.00	126.47					
	06/14/90	132.21	132.00	126.47					
	08/07/90	132.41	132.50	126.97					
	05/07/91	132.94	133.30	127.87					
	04/15/93		131.76	126.22					
	05/11/94	131.91	132.30	127.18					
	04/10/95	131.47	132.02	126.43					
	05/07/96	131.58	132.02	126.61					
	04/23/97	132.04	132.57	126.93					
	04/23/98	131.53	132.25	126.95					
	04/12/99	131.21	131.09	126.32					
	04/11/00	130.85	126.96	125.92					
	04/20/01	129.91	127.17	125.12					
	03/13/02	128.65	126.82	123.98					
	04/19/04	130.76	126.96	125.56					
	04/11/05	130.29	127.10	126.00					
	05/08/06	132.64	129.39	127.15					
	11/29/06	132.45	129.96	127.13					
	04/03/07	132.42	127.30	127.38					
	04/30/09	132.79	127.67	127.67					
	04/05/10	132.82	127.79	127.31					
	04/04/11	132.61	127.56	127.33					
	06/19/12	131.39	127.31	126.15					
	11/20/12	131.21	131.91	127.44					
	04/16/13	131.72	131.97	126.45					
	11/20/13	131.16	126.67	126.69					
	05/09/14	131.87	127.28	126.82	Installed October 2014			Installed May 2014	
	11/21/14	130.76	131.58	125.73	128.48	129.51	123.40	123.59	144.69

Notes:
1. Groundwater levels reflect site conditions at the time of measurement. Actual conditions will vary.
2. Groundwater elevations are given relative to Mean Sea Level.
3. Groundwater elevation data prior to 2012 provided by others.
4. No data provided for groundwater observation well B-1 for 4/15/93.
5. Shaded data for 5/7/91 represents high groundwater limit established for initial permit requirements.

S.W.COLE ENGINEERING, INC.

GROUNDWATER ELEVATIONS GRAPH

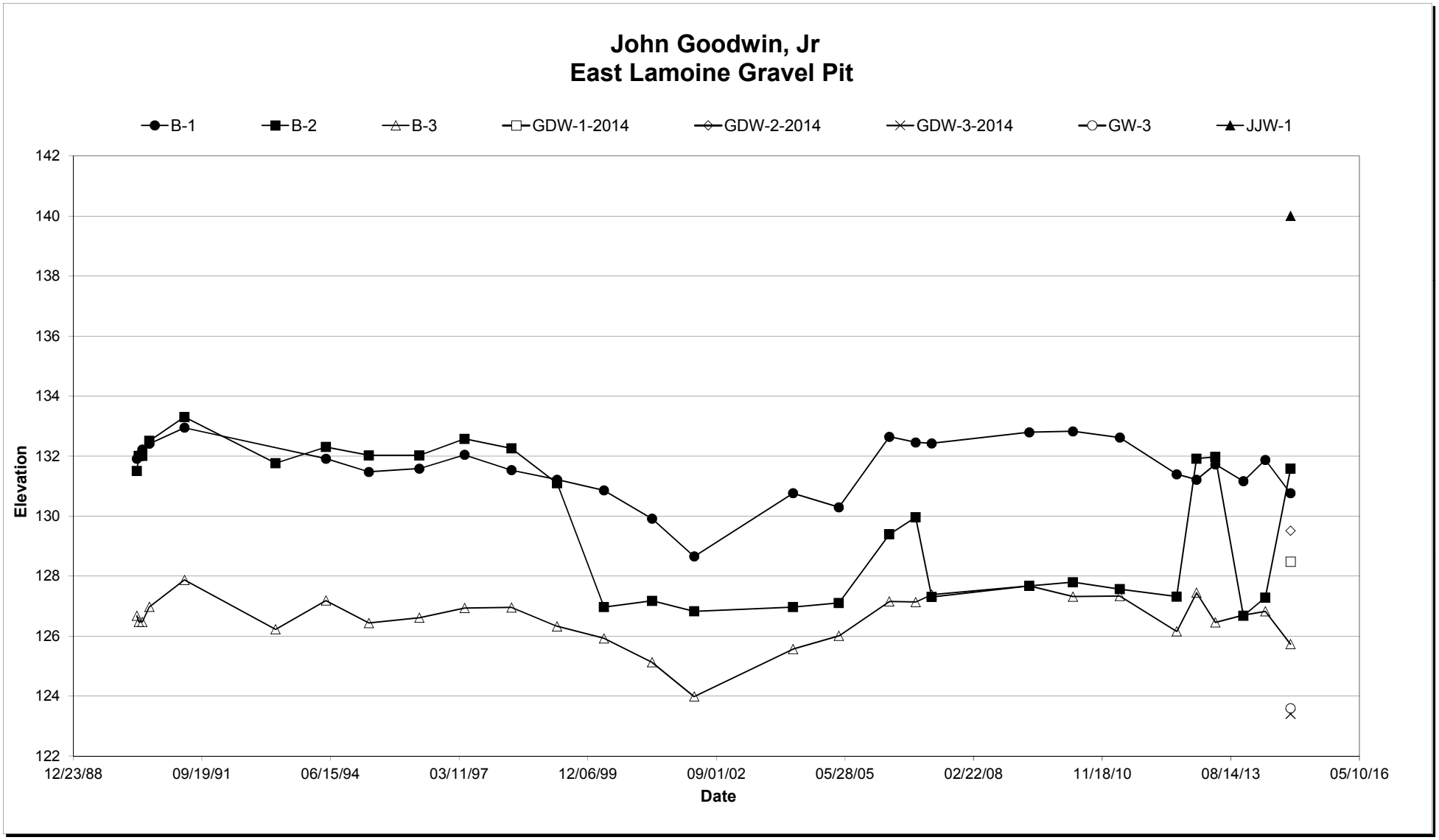

Notes:
1. Groundwater levels reflect site conditions at the time of measurement. Actual conditions will vary.
2. Groundwater elevation data prior to 2012 provided by Engineering Dynamics, Inc.
3. No data provided for groundwater observation well B-1 for 4/15/93.

GROUNDWATER LEVEL BELOW GROUND SURFACE TABLE

John Goodwin, Jr.
East Lamoine Gravel Pit

		Groundwater Observation Locations							
		B-1	B-2	B-3	GDW-1-2014	GDW-2-2014	GDW-3-2014	GW-3	JJW-1
Sampling Dates	05/03/90	39.35	61.01	107.00					
	05/17/90	39.25	60.51	107.20					
	06/14/90	39.05	60.51	107.20					
	08/07/90	38.85	60.01	106.70					
	05/07/91	38.32	59.21	105.80					
	04/15/93		60.75	107.45					
	05/11/94	39.35	60.21	106.49					
	04/10/95	39.79	60.49	107.24					
	05/07/96	39.68	60.49	107.06					
	04/23/97	39.22	59.94	106.74					
	04/23/98	39.73	60.26	106.72					
	04/12/99	40.05	61.42	107.35					
	04/11/00	40.41	65.55	107.75					
	04/20/01	41.35	65.34	108.55					
	03/13/02	42.61	65.69	109.69					
	04/19/04	40.50	65.55	108.11					
	04/11/05	40.97	65.41	107.67					
	05/08/06	38.62	63.12	106.52					
	11/29/06	38.81	62.55	106.54					
	04/03/07	38.84	65.21	106.29					
	04/30/09	38.47	64.84	106.00					
	04/05/10	38.44	64.72	106.36					
	04/04/11	38.65	64.95	106.34					
	06/19/12	36.07	64.89	104.12					
	11/20/12	36.25	60.29	102.83					
	04/16/13	35.74	60.23	103.82					
	11/20/13	36.30	65.53	103.58					
	05/09/14	35.59	64.92	103.45	Installed October 2014			Installed May 2014	
	11/21/14	36.70	60.62	104.54	55.62	61.09	32.70	18.21	44.51

Notes:
1. Groundwater levels reflect site conditions at the time of measurement. Actual conditions will vary.
2. Groundwater level data prior to 2012 provided by others.
3. No data provided for groundwater observation well B-1 for 4/15/93.

GROUNDWATER LEVEL BELOW GROUND SURFACE GRAPH

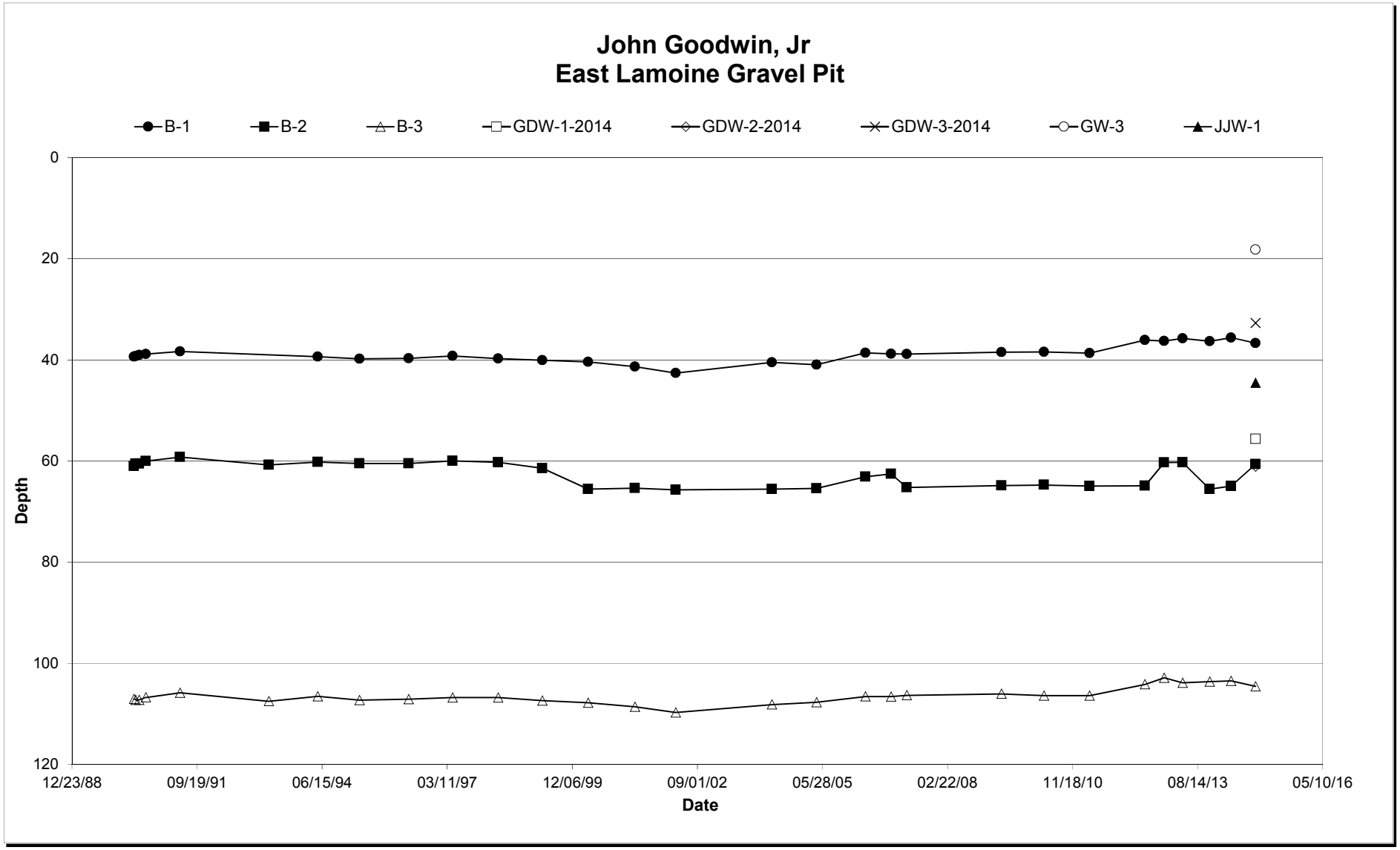

Notes:
1. Groundwater levels reflect site conditions at the time of measurement. Actual conditions will vary.
2. Groundwater elevation data prior to 2012 provided by Engineering Dynamics, Inc.
3. No data provided for groundwater observation well B-1 for 4/15/93.