SUBSURFACE WASTEWATER DISPOSAL SYSTEM APPLICATION

Maine Dept. of Health & Human Services
Division of Environmental Health, 11 SHS
(207) 287-5672 FAX (207) 287-4172

PROPERTY LOCATION

City, Town, or Plantation	LAMOINE
Street or Road	LYDIAS LANE
Subdivision, Lot #	LOT 18 MARLBORO WOODS

>> CAUTION: LPI APPROVAL REQUIRED <<

Town/City LAMOINE Permit # 1866

Date Permit Issued 10/27/17 Fee $ 250.00 Double Fee Charged ( )

Local Plumbing Inspector Signature L.P.I. # 1040

Dep Fee $15.00 ☐ Owner ☐ Town ☒ State

OWNER/APPLICANT INFORMATION

Name (last, first, MI) STANWOOD, BOB ☒ Owner ☐ Applicant

Mailing Address of ☒ Owner ☐ Applicant: 117 LYDIAS WAY, LAMOINE, ME, 04605

Daytime Tel. #

The Subsurface Wastewater Disposal System shall not be installed until a Permit is issued by the Local Plumbing Inspector. The Permit shall authorize the owner or installer to install the disposal system in accordance with the application and the Maine Subsurface Wastewater Disposal Rules.

Municipal Tax Map # 5 Lot # 14-18

OWNER OR APPLICANT STATEMENT

I state and acknowledge that the information submitted is correct to the best of my knowledge and understand that any falsification is reason for the Department and/or Local Plumbing Inspector to deny a permit.

Robert E. Stanwood 10/20/17

Signature of Owner or Applicant | Date

CAUTION: INSPECTION REQUIRED

I have inspected the installation authorized above and found it to be in compliance with Subsurface Wastewater Disposal Rules Application. _____ (1st Date Approved)

Local Plumbing Inspector Signature _____ (2nd Date Approved)

PERMIT INFORMATION

TYPE OF APPLICATION

- ☐ 1. First Time System
- ☐ 2. Replacement System

Type Replaced: _____

Year Installed: 2009

- ☒ 3. Expanded System
  - ☐ a. < 25% Expansion
  - ☒ b. ≥ 25% Expansion
- ☐ 4. Experimental System
- ☐ 5. Seasonal Conversion

SIZE OF PROPERTY

_____ ☐ sq. ft.

2± ☒ acres

SHORELAND ZONING

☐ Yes ☒ No

THIS APPLICATION REQUIRES

- ☒ 1. No Rule Variance
- ☐ 2. First Time System Variance
  - ☐ a. Local Plumbing Inspector Approval
  - ☐ b. State & Local Plumbing Inspector Approval
- ☐ 3. Replacement System Variance
  - ☐ a. Local Plumbing Inspector Approval
  - ☐ b. State & Local Plumbing Inspector Approval
- ☐ 4. Minimum Lot Size Variance
- ☐ 5. Seasonal Conversion Permit

DISPOSAL SYSTEM TO SERVE

- ☒ 1. Single Family Dwelling Unit, No. of Bedrooms: 3
- ☐ 2. Multiple Family Dwelling, No. of Units: _____
- ☒ 3. Other: (SPECIFY) 2 BEDROOM APARTMENT

Current Use: ☐ Seasonal ☒ Year Round ☐ Undeveloped

DISPOSAL SYSTEM COMPONENT(S)

- ☒ 1. Complete Non-engineered System
- ☐ 2. Primitive System (graywater & alt. toilet)
- ☐ 3. Alternative Toilet, specify: _____
- ☐ 4. Non-engineered Treatment Tank (only)
- ☐ 5. Holding Tank, _____ gallons
- ☐ 6. Non-engineered Disposal Field (only)
- ☐ 7. Separated Laundry System
- ☐ 8. Complete Engineered System(2000 gpd or more)
- ☐ 9. Engineered Treatment Tank (only)
- ☐ 10. Engineered Disposal Field (only)
- ☐ 11. Pre-treatment, specify: _____
- ☐ 12. Miscellaneous components

TYPE OF WATER SUPPLY

☒ 1. Drilled Well ☐ 2. Dug Well ☐ 3. Private ☐ 4. Public ☐ 5. Other: _____

DESIGN DETAILS (SYSTEM LAYOUT SHOWN ON PAGE 3)

TREATMENT TANK

- ☒ 1. Concrete
  - ☒ a. Regular 1-1000 GAL. EXISTING,
  - ☐ b. Low Profile 1-1000 GAL PROPOSED
- ☐ 2. Plastic
- ☐ 3. Other: _____

CAPACITY 2000 gallons

DISPOSAL FIELD TYPE & SIZE

- ☐ 1. Stone Bed ☐ 2. Stone Trench
- ☒ 3. Proprietary Device 18 END FEED CONCRETE CHAMBERS
  - ☐ a. Cluster Array ☒ c. Linear
  - ☒ b. Regular load ☐ d. H-20 load
- ☐ 4. Other: _____

SIZE 1620 ☒ sq. ft. ☐ lin. ft.

GARBAGE DISPOSAL UNIT

☒ 1. No ☐ 2. Yes ☐ 3. Maybe

If Yes or Maybe, specify one below:

- ☐ a. Multi-compartment Tank
- ☐ b. _____ Tanks in Series
- ☐ c. Increase in Tank Capacity
- ☐ d. Filter on Tank Outlet

DESIGN FLOW

450 gallons per day

BASED ON

- ☒ 1. Table 4A (dwelling unit(s)
- ☐ 2. Table 4C (other facilities)

SHOW CALCULATIONS for other facilities

3 BEDROOM HOUSE: 270 GPD

2 BEDROOM APT.: 180 GPD

450 GPD

- ☐ 3. Section 4G (meter readings) ATTACH WATER METER DATA

SOIL DATA & DESIGN CLASS

PROFILE 3 CONDITION C

at Observation Hole # 1

Depth 18 "

OF MOST LIMITING SOIL FACTOR

DISPOSAL FIELD SIZING

- ☐ 1. Medium – 2.6 sq. ft./gpd
- ☒ 2. Medium-Large – 3.3 sq. ft./gpd
- ☐ 3. Large – 4.1 sq. ft./gpd
- ☐ 4. Extra Large – 5.0 sq. ft./gpd

EFFLUENT/EJECTOR PUMP

- ☒ 1. Not Required
- ☐ 2. May be Required
- ☐ 3. Required

Specify only for engineered systems

DOSE: _____ gallons

LATTITUDE AND LONGITUDE at Center of Disposal Area

Lat. 44° d 29' m 01" s N

Lon. 68° d 16' m 59" s W

If g.p.s., state margin of error 30'±

SITE EVALUATOR STATEMENT

I certify that on 4-17-15 (date) I completed a site evaluation on this property and state that the data reported are accurate and that the proposed system is in compliance with the State of Maine Subsurface Wastewater Disposal Rules (10-144A CMR 241).

Site Evaluator Signature	319 SE#	4-22-15 UPDATED 7-11-17 Date
WILLIAM A. LaBELLE, JR. Site Evaluator Name Printed	(207) 537-5900 Telephone Number	labelleseptic@rivah.net E-mail Address

Note: Changes to or deviations from the design should be confirmed with the Site Evaluator.

Town, City, Plantation	Street, Road, Subdivision	Owner or Applicant Name
LAMOINE	LOT 18 LYDIAS LANE	BOB STANWOOD

SITE PLAN:

SCALE: 1" = 50 FT.

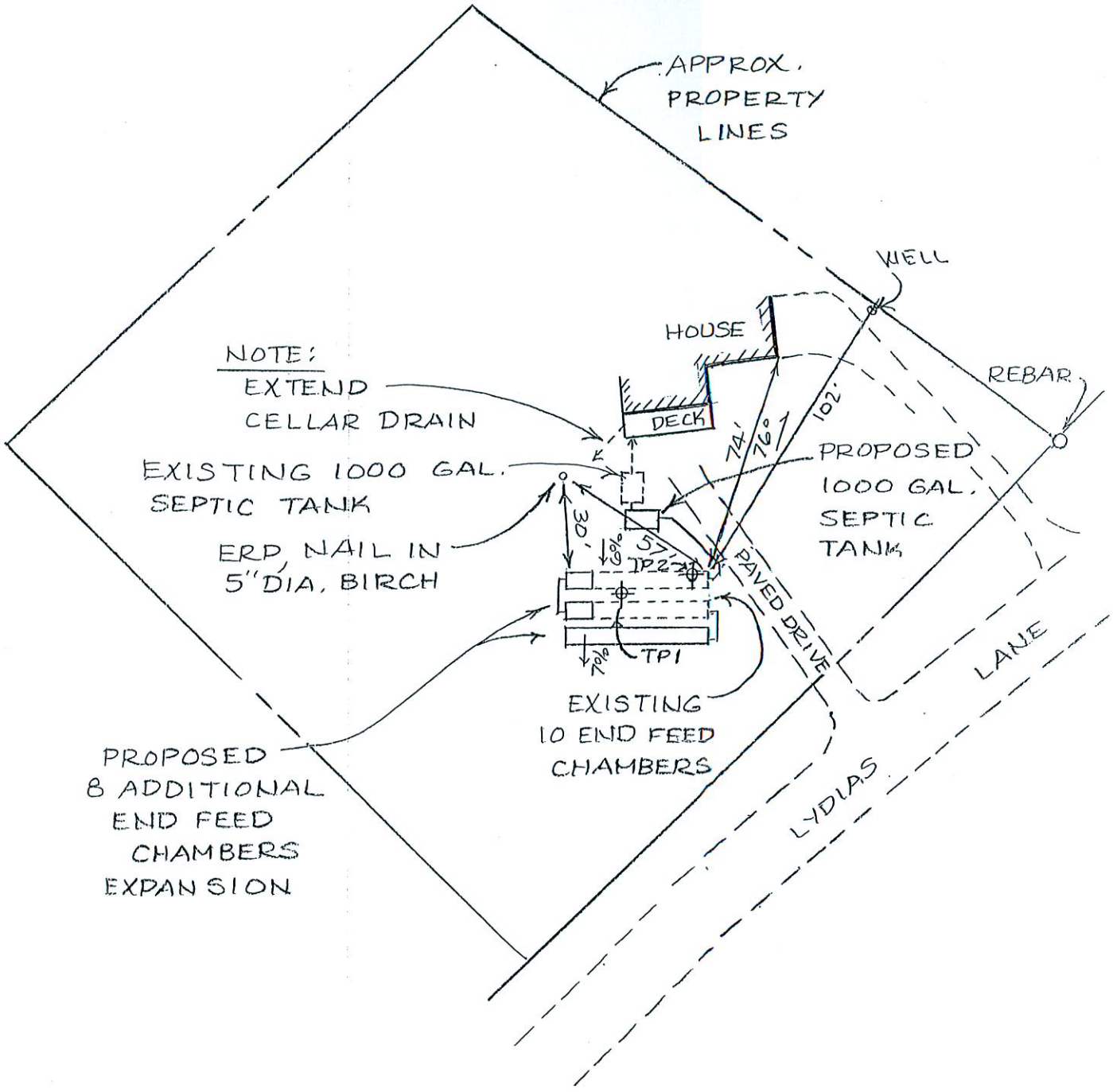

Site Evaluator's Signature	S.E. #	Date	
[signature]	319	4-22-15	7-11-17

SUBSURFACE WASTEWATER DISPOSAL SYSTEM APPLICATION

Department of Human Services
Division of Health Engineering
(207) 287-5672 FAX (207) 287-3165

Town, City, Plantation	Street, Road, Subdiviision	Owner's Name
LAMOINE	LYDIAS WAY	BOB STANWOOD

SITE PLAN

Scale 1" = 50 Ft.

SITE LOCATION PLAN
(Map from Maine Atlas recommended)

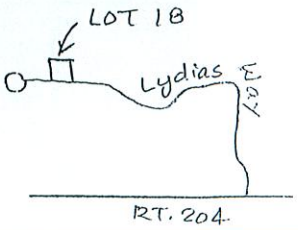

(SEE ATTACHED SITE PLAN)

SOIL DESCRIPTION AND CLASSIFICATION (Location of Observation Holes Shown Above)

Observation Hole #1 ☒ Test Pit ☐ Boring

1 1/2" Depth of Organic Horizon Above Mineral Soil

Depth below mineral soil surface (inches)	Texture	Consistency	Color	Mottling
0–10	SANDY STONY LOAM	FRIABLE	DARK BROWN	N.E.
10–20			YELLOW BROWN TO LIGHT YELLOW BROWN	
20–30		FIRM		COMMON FAINT
30–50				

Soil Classification		Slope	Limiting Factor	
3	C	5 %	18"	☒ Ground Water ☐ Restrictive Layer ☐ Bedrock ☐ Pit Depth
Profile	Condition			

Observation Hole #2 ☒ Test Pit ☐ Boring

1 1/2" Depth of Organic Horizon Above Mineral Soil

Depth below mineral soil surface (inches)	Texture	Consistency	Color	Mottling
0–10	SANDY STONY COBBLY LOAM	FRIABLE	BLACK	N.E.
10–20			YELLOW BROWN	
20–30		FIRM		FEW FAINT
30–50				

Soil Classification		Slope	Limiting Factor	
3	C	5 %	18"	☒ Ground Water ☐ Restrictive Layer ☐ Bedrock ☐ Pit Depth
Profile	Condition			

Site Evaluator's Signature	S. E. #	Date	
[signature]	319	4-22-15	7-11-17

SUBSURFACE WASTEWATER DISPOSAL SYSTEM APPLICATION

Maine Dept. of Health & Human Services
Division of Environmental Health, 11 SHS
(207) 287-5672 FAX (207) 287-4172

Town, City, Plantation	Street, Road, Subdivision	Owner or Applicant Name
LAMOINE	LOT 18 LYDIAS LANE	BOB STANWOOD

SUBSURFACE WASTEWATER DISPOSAL PLAN

SCALE: 1" = 20 FT.

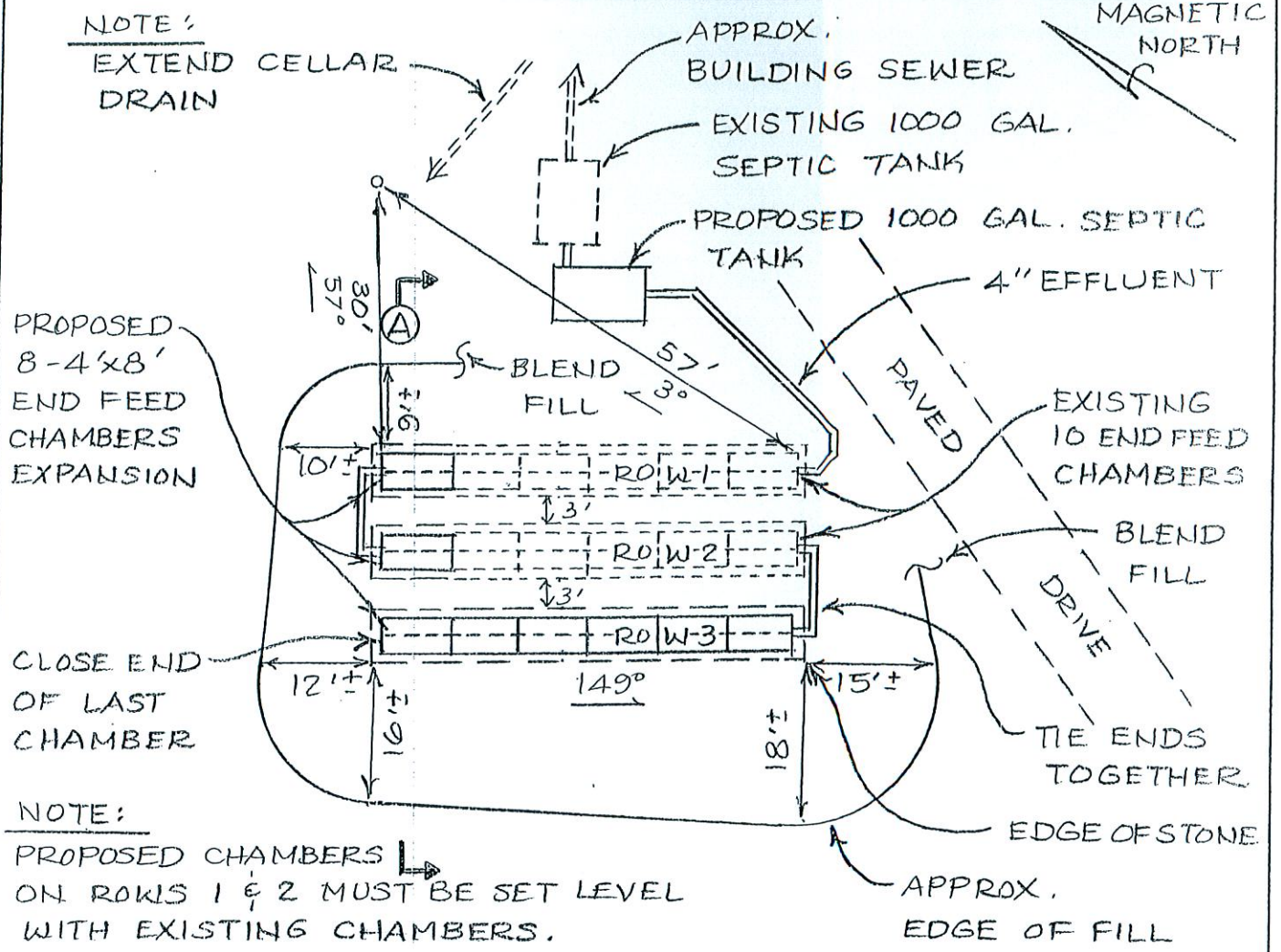

NOTE:
PROPOSED CHAMBERS ON ROWS 1 & 2 MUST BE SET LEVEL WITH EXISTING CHAMBERS.

FILL REQUIREMENTS		CONSTRUCTION ELEVATIONS	SYSTEM:	PRIVY:	ELEVATION REFERENCE POINT
Depth of Backfill (Upslope)	22"	Finished Grade Elevation	(See		Location & Description NAIL 6"
Depth of Backfill (Downslope)	27"-33"	Top of Distribution Pipe or Proprietary Device	attached	N/A	ABOVE GROUND IN 5" DIA.
Depths @ cross-section shown below or on X-sec. detail.		Bottom of Disposal Field	X-Sec.)		BIRCH. Reference Elevation is: 0"

DISPOSAL AREA CROSS SECTION (SEE ATTACHED CROSS SECTION)

NOTES:

1. Tank(s) must be 8' minimum from building.
2. Grade surrounding area to divert surface water away from system.
3. All work done adjacent to wetlands and water bodies must be done in compliance with section 11-m of the Subsurface Wastewater Disposal Rules. Erosion and sediment control measures must be in accordance with the March 2003 edition of the Maine DEP Handbook "Maine Erosion and Sediment Control BMPS" (DEPWO588).
4. Install septic tank(s) risers 18" in diameter "minimum" to within 6" of finished grade on inlet, cleanout and outlet covers; (recommend extending risers to finish grade).

Site Evaluator's Signature	S.E. #	Date
[signature]	319	4-22-15 7-11-17

NOTE: GRADE UPSLOPE TO DIVERT SURFACE WATER AWAY FROM SYSTEM AND DRIVE.

DISPOSAL AREA CROSS SECTION
SLOPE 6% - 7%

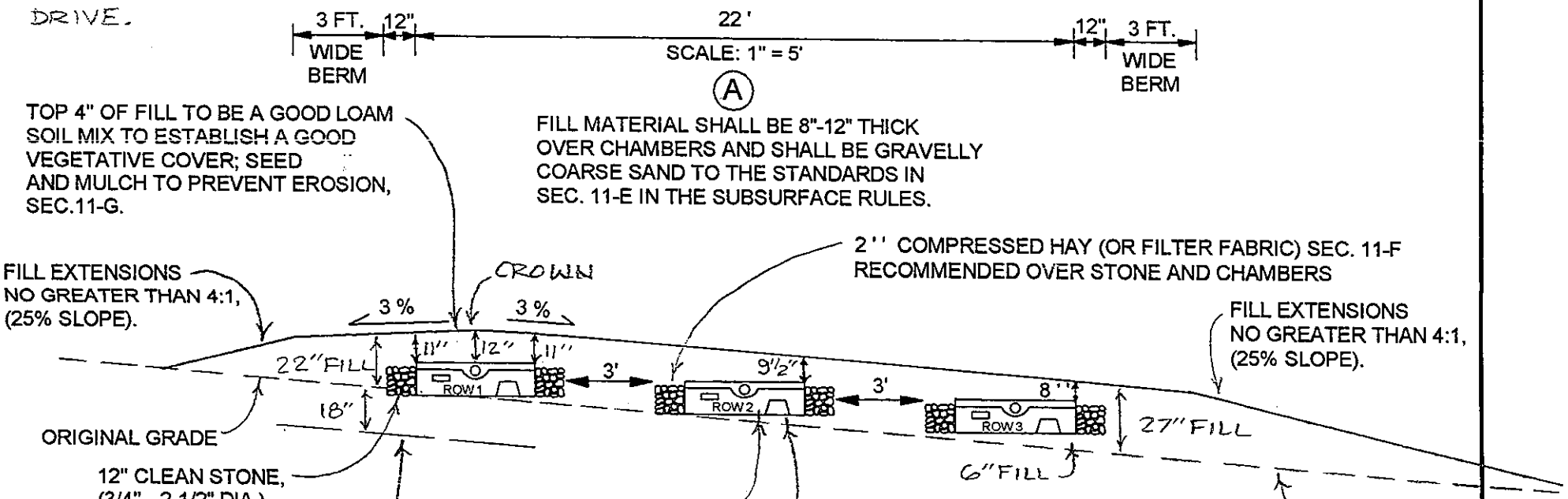

ELEVATIONS:

		ROW 1	ROW 2	ROW 3
ELEV. REF. PT. (ERP):	0''			
FINISHED GRADE:		(CROWN -26''±)	(-35½''± MIN.)	(-45'' MIN.)
TOP OF CHAMBERS:		-38''±	-45''±	-53''
BOTTOM OF CHAMBERS:		-51''±	-58''±	-66''

NOTE: PROPOSED CHAMBERS ON ROWS 1 & 2 MUST BE SET LEVEL WITH EXISTING CHAMBERS.

NOTE:
SYSTEM MUST BE INSTALLED ACCORDING TO THE RULES AND PRACTICES SET FORTH IN THE MOST CURRENT VERSION OF THE STATE OF MAINE SUBSURFACE WASTEWATER DISPOSAL RULES. INSTALLATION CONTRATOR MUST BE FAMILIAR WITH SAID RULES AND CONSTRUCT SYSTEM IN FULL COMPLIANCE WITH SECTION 11 OF SAID RULES.

OWNER: BOB STANWOOD

LOCATION: LAMOINE LOT 18

WILLIAM A. LaBELLE, JR.

319
S.E.#

4-22-15 7-11-17
DATE