SUBSURFACE WASTEWATER DISPOSAL SYSTEM APPLICATION

Maine Dept. of Health & Human Services
Division of Environmental Health, 11 SHS
(207) 287-5672 FAX (207) 287-4172

PROPERTY LOCATION

City, Town, or Plantation: LAMOINE

Street or Road: SOUTH ROAD

Subdivision, Lot #:

>> CAUTION: LPI APPROVAL REQUIRED <<

Town/City: Lamoine Permit #: 1974

Date Permit Issued: 10/15/19 Fee $: 265 Double Fee Charged ( )

Local Plumbing Inspector Signature: [signature] L.P.I. #: 394

☐ Owner ☐ Town ☒ State

OWNER/APPLICANT INFORMATION

Name (last, first, MI): BRYANT, CHRIS ☒ Owner ☐ Applicant

Mailing Address of ☒ Owner ☐ Applicant: 23 CLIFF ROAD, CANTON, MA 02021

Daytime Tel. #: (617) 462-8867

The Subsurface Wastewater Disposal System shall not be installed until a Permit is issued by the Local Plumbing Inspector. The Permit shall authorize the owner or installer to install the disposal system in accordance with the application and the Maine Subsurface Wastewater Disposal Rules.

Municipal Tax Map #: 14 Lot #: 8

OWNER OR APPLICANT STATEMENT

I state and acknowledge that the information submitted is correct to the best of my knowledge and understand that any falsification is reason for the Department and/or Local Plumbing Inspector to deny a permit.

Signature of Owner or Applicant: [signature] Date: 10/15/19

CAUTION: INSPECTION REQUIRED

I have inspected the installation authorized above and found it to be in compliance with Subsurface Wastewater Disposal Rules Application.

Local Plumbing Inspector Signature _____ (1st Date Approved) _____ (2nd Date Approved)

PERMIT INFORMATION

TYPE OF APPLICATION

☒ 1. First Time System
☐ 2. Replacement System
Type Replaced: _____
Year Installed: _____
☐ 3. Expanded System
☐ a. < 25% Expansion
☐ b. ≥ 25% Expansion
☐ 4. Experimental System
☐ 5. Seasonal Conversion

SIZE OF PROPERTY

_____ ☐ sq. ft.
2± ☒ acres

SHORELAND ZONING

☐ Yes ☒ No

THIS APPLICATION REQUIRES

☒ 1. No Rule Variance
☐ 2. First Time System Variance
☐ a. Local Plumbing Inspector Approval
☐ b. State & Local Plumbing Inspector Approval
☐ 3. Replacement System Variance
☐ a. Local Plumbing Inspector Approval
☐ b. State & Local Plumbing Inspector Approval
☐ 4. Minimum Lot Size Variance
☐ 5. Seasonal Conversion Permit

DISPOSAL SYSTEM TO SERVE

☒ 1. Single Family Dwelling Unit, No. of Bedrooms: 3
☐ 2. Multiple Family Dwelling, No. of Units: _____
☐ 3. Other: (SPECIFY) _____

Current Use: ☐ Seasonal ☐ Year Round ☒ Undeveloped

DISPOSAL SYSTEM COMPONENT(S)

☒ 1. Complete Non-engineered System
☐ 2. Primitive System (graywater & alt. toilet)
☐ 3. Alternative Toilet, specify: _____
☐ 4. Non-engineered Treatment Tank (only)
☐ 5. Holding Tank, _____ gallons
☐ 6. Non-engineered Disposal Field (only)
☐ 7. Separated Laundry System
☐ 8. Complete Engineered System(2000 gpd or more)
☐ 9. Engineered Treatment Tank (only)
☐ 10. Engineered Disposal Field (only)
☐ 11. Pre-treatment, specify: _____
☐ 12. Miscellaneous components

TYPE OF WATER SUPPLY

TO BE
☒ 1. Drilled Well ☐ 2. Dug Well ☐ 3. Private
☐ 4. Public ☐ 5. Other: _____

DESIGN DETAILS (SYSTEM LAYOUT SHOWN ON PAGE 3)

TREATMENT TANK

☒ 1. Concrete
☒ a. Regular
☐ b. Low Profile
☐ 2. Plastic
☐ 3. Other: _____
CAPACITY 1000 gallons

SOIL DATA & DESIGN CLASS

PROFILE 3 / CONDITION D
at Observation Hole # 1
Depth 12"
OF MOST LIMITING SOIL FACTOR

DISPOSAL FIELD TYPE & SIZE

☐ 1. Stone Bed ☐ 2. Stone Trench
☒ 3. Proprietary Device 10 END FEED CONCRETE CHAMBERS
☐ a. Cluster Array ☒ c. Linear
☒ b. Regular load ☐ d. H-20 load
☐ 4. Other: _____
SIZE 900 ☒ sq. ft. ☐ lin. ft.

DISPOSAL FIELD SIZING

☐ 1. Medium – 2.6 sq. ft./gpd
☒ 2. Medium-Large – 3.3 sq. ft./gpd
☐ 3. Large – 4.1 sq. ft./gpd
☐ 4. Extra Large – 5.0 sq. ft./gpd

GARBAGE DISPOSAL UNIT

☒ 1. No ☐ 2. Yes ☐ 3. Maybe
If Yes or Maybe, specify one below:
☐ a. Multi-compartment Tank
☐ b. _____ Tanks in Series
☐ c. Increase in Tank Capacity
☐ d. Filter on Tank Outlet

EFFLUENT/EJECTOR PUMP

☐ 1. Not Required
☒ 2. May be Required
☐ 3. Required
Specify only for engineered systems
DOSE: _____ gallons

DESIGN FLOW

270 gallons per day
BASED ON
☒ 1. Table 4A (dwelling unit(s)
☐ 2. Table 4C (other facilities)
SHOW CALCULATIONS for other facilities

☐ 3. Section 4G (meter readings)
ATTACH WATER METER DATA

LATITUDE AND LONGITUDE

at Center of Disposal Area
Lat. 44° d 27' m 25.8" s N
Lon. 68° d 17' m 06.8" s W
if g.p.s., state margin of error 30'

SITE EVALUATOR STATEMENT

I certify that on 6-22-15 (date) I completed a site evaluation on this property and state that the data reported are accurate and that the proposed system is in compliance with the State of Maine Subsurface Wastewater Disposal Rules (10-144A CMR 241).

Site Evaluator Signature: [signature]	SE#: 319	Date: 6-25-15 UPDATED 12-1-17 WAL
Site Evaluator Name Printed: WILLIAM A. LaBELLE, JR.	Telephone Number: (207) 537-5900	E-mail Address: labelleseptic@rivah.net

Note: Changes to or deviations from the design should be confirmed with the Site Evaluator.

SUBSURFACE WASTEWATER DISPOSAL SYSTEM APPLICATION

Maine Dept. of Health & Human Services
Division of Environmental Health, 11 SHS
(207) 287-5672 FAX (207) 287-4172

Town, City, Plantation	Street, Road, Subdivision	Owner or Applicant Name
LAMOINE	SOUTH ROAD	CHRIS BRYANT

SITE PLAN

Scale 1" = 60 Ft.

SITE LOCATION PLAN
(Attach map from Maine Atlas for First Time System Variance)

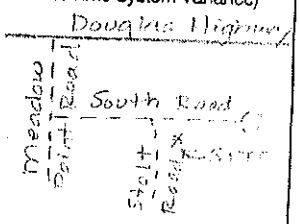

(SEE ATTACHED SITE PLAN)

SOIL PROFILE DESCRIPTION AND CLASSIFICATION (Location of Observation Holes Shown Above or on pg. 2A)

Observation Hole #1 ☒ Test Pit ☐ Boring

3" Depth of organic horizon above mineral soil

Depth below mineral soil surface (inches)	Texture	Consistency	Color	Mottling
0–10	SANDY GRAVELLY LOAM	FRIABLE	VERY DARK BROWN (10YR 2/2)	N.E.
10–20			DARK YELLOWISH BROWN (10YR 3/6)	FEW FAINT
20–30		FIRM	LIGHT OLIVE BROWN (2.5Y 5/6)	COMMON DISTINCT
30–50	STANDING WATER @ 20"			

Soil Profile	Classification Condition	Slope	Limiting Factor	
3	C	4 %	12" Depth	☒ Ground Water ☐ Restrictive Layer ☐ Bedrock ☐ Pit Depth

Observation Hole #2 ☒ Test Pit ☐ Boring

3" Depth of organic horizon above mineral soil

Depth below mineral soil surface (inches)	Texture	Consistency	Color	Mottling
0–10	SANDY GRAVELLY LOAM	FRIABLE	DARK BROWN (10YR 3/3)	N.E.
10–20			DARK YELLOWISH BROWN (10YR 3/6)	FEW FAINT TO MANY PROMINENT
20–30		FIRM		
30–50	STANDING WATER @ 16"			

Soil Profile	Classification Condition	Slope	Limiting Factor	
3	C	4 %	12" Depth	☒ Ground Water ☐ Restrictive Layer ☐ Bedrock ☐ Pit Depth

Site Evaluator's Signature: [signature] S.E. # 319 Date 6-25-15 12-1-17

Town, City, Plantation	Street, Road, Subdivision	Owner or Applicant Name
LAMOINE	SOUTH ROAD	CHRIS BRYANT

SITE PLAN:

SCALE: 1" = 60 FT.

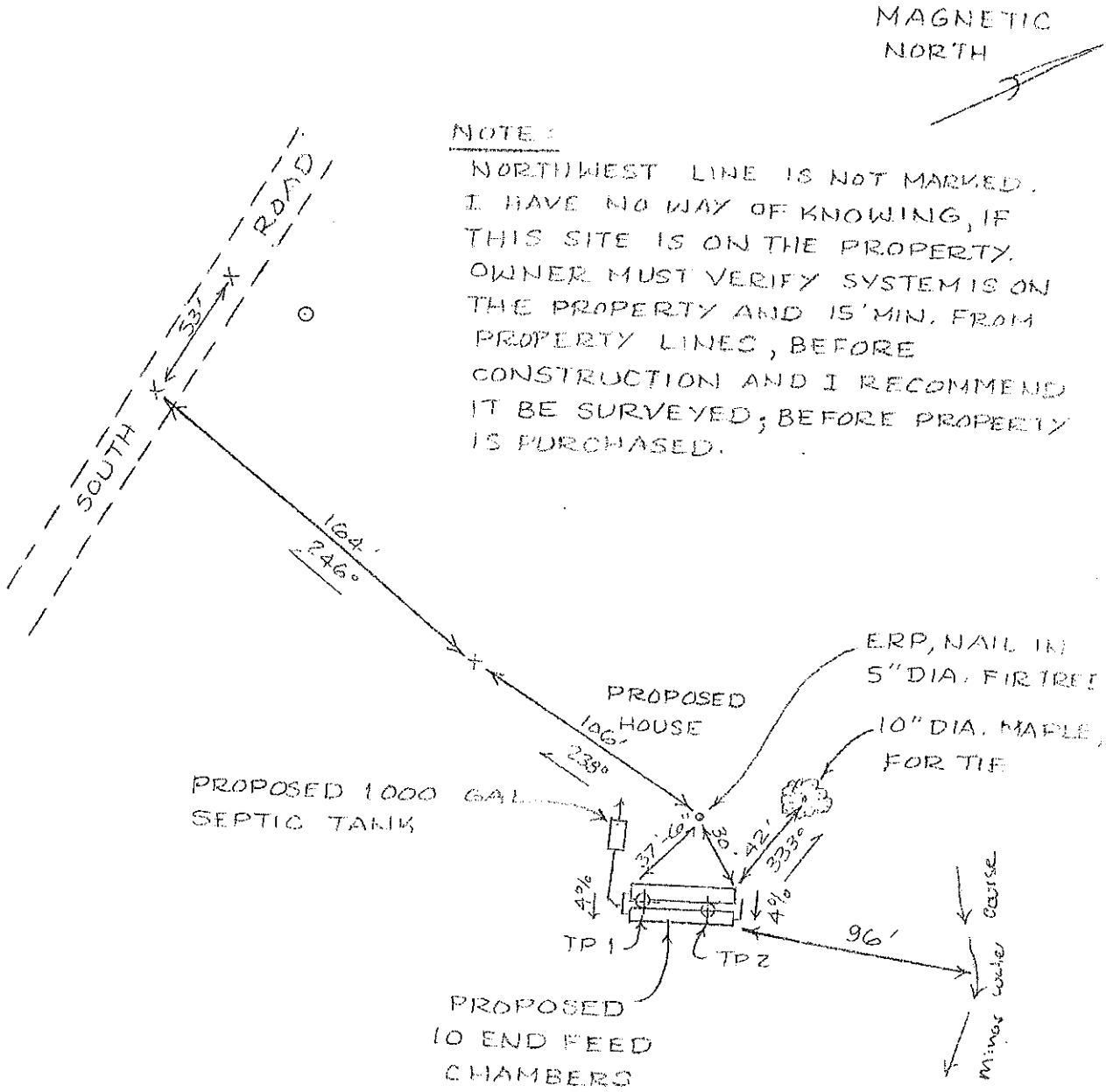

NOTE:
IF PUMPED, INSTALL LIFT STATION WITH RISERS TO FINISH GRADE, 2" PUMP LINE PROTECTED FROM FREEZING AND CRUSHING AND PROTECT LIFT STATION FROM FREEZING. INSTALL DISTRIBUTION BOX; PROTECTED FROM FREEZING.

Site Evaluator's Signature	S.E. #	Date
[signature]	319	12-1-17 6-25-15

SUBSURFACE WASTEWATER DISPOSAL SYSTEM APPLICATION

Maine Dept. of Health & Human Services
Division of Environmental Health, 11 SHS
(207) 287-5672 FAX (207) 287-4172

Town, City, Plantation	Street, Road, Subdivision	Owner or Applicant Name
LAMOINE	SOUTH ROAD	CHRIS BRYANT

SUBSURFACE WASTEWATER DISPOSAL PLAN

SCALE: 1" = 20 FT.

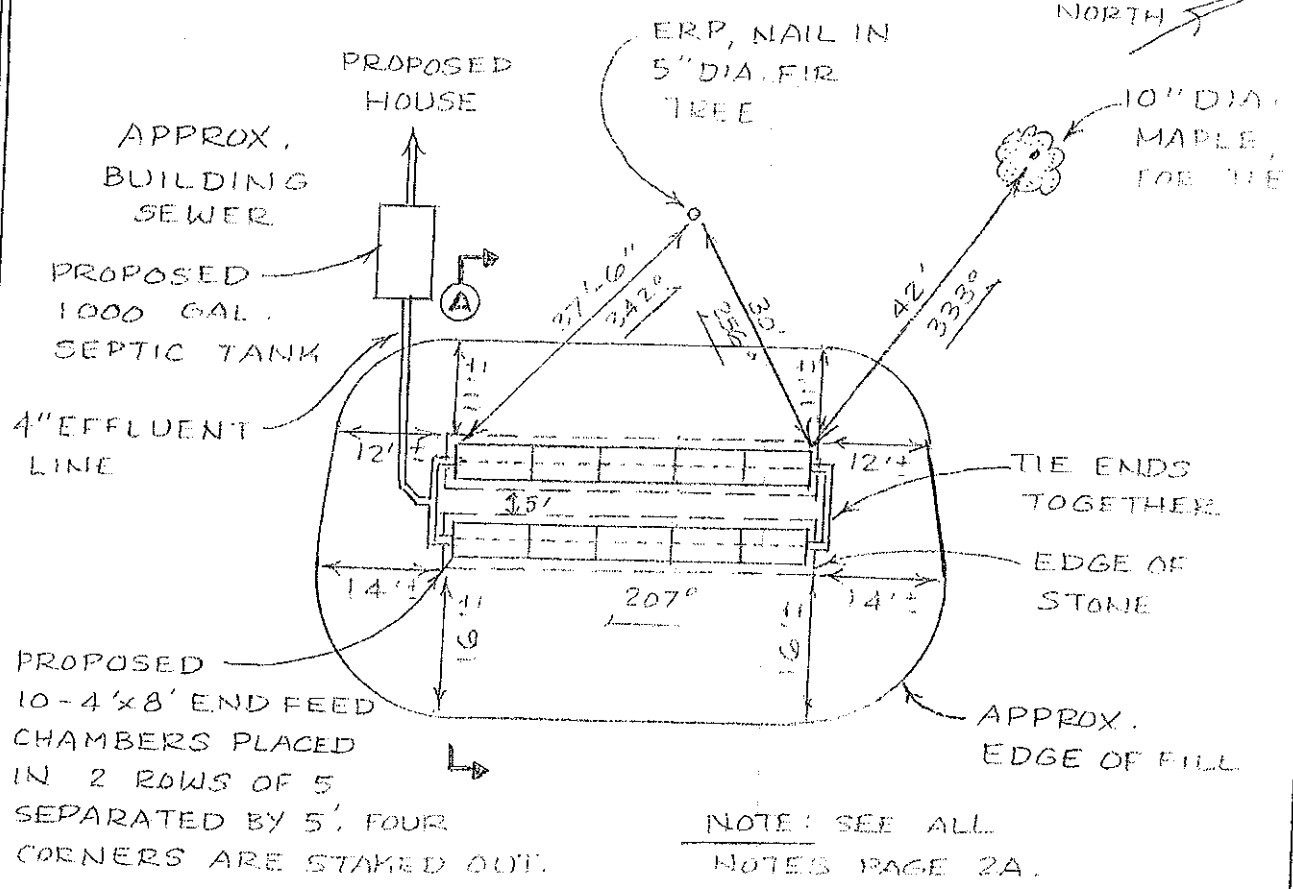

FILL REQUIREMENTS		CONSTRUCTION ELEVATIONS	SYSTEM:	PRIVY:	ELEVATION REFERENCE POINT
Depth of Backfill (Upslope)	28"	Finished Grade Elevation CROWN	-35"		Location & Description NAIL 51"
Depth of Backfill (Downslope)	34"	Top of Distribution Pipe or Proprietary Device	-47"	N/A	ABOVE GROUND IN 5" DIA.
Depths @ cross-section shown below or on X-sec. detail.		Bottom of Disposal Field	-60"		FIR TREE.
					Reference Elevation is: 0"

DISPOSAL AREA CROSS SECTION (SEE ATTACHED CROSS SECTION)

NOTES:

1. Tank(s) must be 8' minimum from building.
2. Grade surrounding area to divert surface water away from system.
3. Well to be 51' minimum from septic tank(s) and 100' minimum from disposal field.
4. All work done adjacent to wetlands and water bodies must be done in compliance with section 11-M of the Subsurface Wastewater Disposal Rules. Erosion and sediment control measures must be in accordance with the March 2003 edition of the Maine DEP Handbook "Maine Erosion and Sediment Control BMPS" (DEPW0588).
5. Install septic tank(s) risers 18" in diameter "minimum" to within 6" of finished grade on inlet, cleanout and outlet covers (recommend extending risers to finish grade).
6. Full basement below grade foundation, frost wall or columns must be 20' minimum from stone around chambers and slab on grade must be 15' minimum from stone around chambers.

Site Evaluator's Signature	S.E. #	Date
[signature]	319	6-25-15
		12-1-17

NOTE: GRADE UPSLOPE TO DIVERT SURFACE WATER AWAY FROM SYSTEM.

NOTE: SEE ALL NOTES PAGE 2A.

DISPOSAL AREA CROSS SECTION

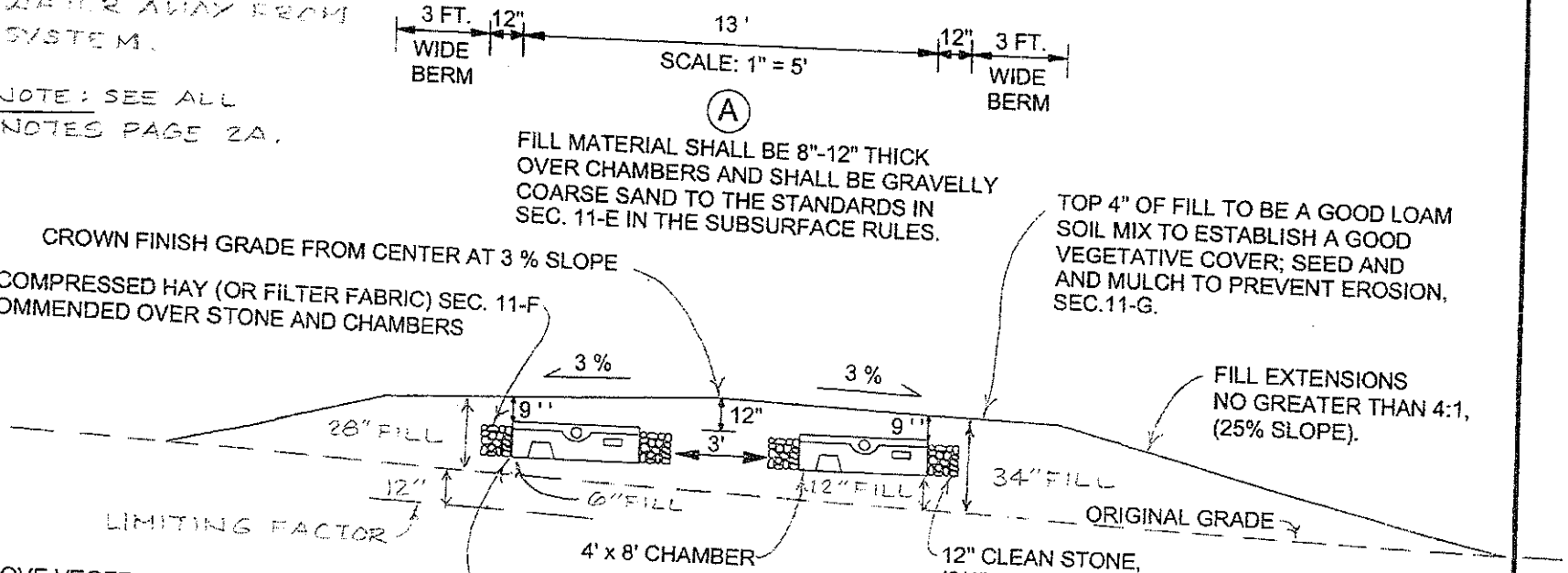

THOROUGHLY MIX, DISK OR ROTO-TILL CLEAN, COARSE, SHARP SAND INTO TOP 4 INCHES OF ORIGINAL SOIL TO CREATE A TRANSITION ZONE, SEC. 11-B.

ELEVATIONS:

ELEV. REF. PT. (ERP): 0"

FINISHED GRADE: -35" CROWN

TOP OF CHAMBERS: -47"

BOTTOM OF CHAMBERS: -60"

NOTE:
SYSTEM MUST BE INSTALLED ACCORDING TO THE RULES AND PRACTICES SET FORTH IN THE MOST CURRENT VERSION OF THE STATE OF MAINE SUBSURFACE WASTEWATER DISPOSAL RULES. INSTALLATION CONTRATOR MUST BE FAMILIAR WITH SAID RULES AND CONSTRUCT SYSTEM IN FULL COMPLIANCE WITH SECTION 11 OF SAID RULES.

OWNER: CHRIS BRYANT

LOCATION: LAMOINE

W. C. L. Jr.

WILLIAM A. LaBELLE, JR.

319

S.E.#

6-25-15

DATE 12-1-17