SUBSURFACE WASTEWATER DISPOSAL SYSTEM APPLICATION

Maine Dept. of Health & Human Services
Div. Environmental Health, 11 SHS
(207) 287-2070 FAX (207) 287-4172

PROPERTY LOCATION

City, Town, or Plantation: LAMOINE

Street or Road: ACER LANE

Subdivision, Lot #:

>> CAUTION: LPI APPROVAL REQUIRED <<

Town/City: LAMOINE Permit #: 1989

Date Permit Issued: 5/12/20 Fee $: 265 Double Fee Charged ( )

Rebecca Albright (R) L.P.I. #: 394

Local Plumbing Inspector Signature

Fee: $ 265 state min. fee $ _____ Locally adopted fee

Copy: ☐ Owner ☐ Town ☑ State

OWNER/APPLICANT INFORMATION

Name (last, first, MI): BOHNER, TOM ☑ Owner ☐ Applicant

Mailing Address of ☑ Owner ☐ Applicant: 3922 WEST IOWA AVE, TAMPA FL 33616

Daytime Tel. #: (813) 831-3328

email address:

The Subsurface Wastewater Disposal System shall not be installed until a Permit is issued by the Local Plumbing Inspector. The Permit shall authorize the owner or installer to install the disposal system in accordance with the application and the Maine Subsurface Wastewater Disposal Rules.

Municipal Tax Map # 4 Lot # 59-1

OWNER OR APPLICANT STATEMENT

I state and acknowledge that the information submitted is correct to the best of my knowledge and understand that any falsification is reason for the Department and/or Local Plumbing Inspector to deny a permit.

Signature of Owner or Applicant: _____ Date: 5-11-2020

CAUTION: INSPECTION REQUIRED

I have inspected the installation authorized above and found it to be in compliance with Subsurface Wastewater Disposal Rules Application. _____ (1st Date Approved)

Local Plumbing Inspector Signature _____ (2nd Date Approved) _____

PERMIT INFORMATION

TYPE OF APPLICATION

☑ 1. First Time System
☐ 2. Replacement System
Type Replaced: _____
Year Installed: _____
☐ 3. Expanded System
☐ a. Minor Expansion <25%
☐ b. Major Expansion ≥ 25%
☐ 4. Experimental System
☐ 5. Seasonal Conversion

SIZE OF PROPERTY

_____ ☐ sq. ft.
22 ☑ acres

SHORELAND ZONING

☐ Yes ☑ No

THIS APPLICATION REQUIRES

☑ 1. No Rule Variance
☐ 2. First Time System Variance
☐ a. Local Plumbing Inspector Approval
☐ b. State & Local Plumbing Inspector Approval
☐ 3. Replacement System Variance
☐ a. Local Plumbing Inspector Approval
☐ b. State & Local Plumbing Inspector Approval
☐ 4. Minimum Lot Size Variance
☐ 5. Seasonal Conversion Permit

DISPOSAL SYSTEM TO SERVE

☑ 1. Single Family Dwelling Unit, No. of Bedrooms: 3
☐ 2. Multiple Family Dwelling, No. of Units: _____
☐ 3. Other: (SPECIFY) _____

Current Use: ☐ Seasonal ☐ Year Round ☑ Undeveloped

DISPOSAL SYSTEM COMPONENT(S)

☑ 1. Complete Non-engineered System
☐ 2. Primitive System (graywater & alt. toilet)
☐ 3. Alternative Toilet, specify: _____
☐ 4. Non-engineered Treatment Tank (only)
☐ 5. Holding Tank, _____ gallons
☐ 6. Non-engineered Disposal Field (only)
☐ 7. Separated Laundry System
☐ 8. Complete Engineered System(2000 gpd or more)
☐ 9. Engineered Treatment Tank (only)
☐ 10. Engineered Disposal Field (only)
☐ 11. Pre-treatment, specify: _____
☐ 12. Miscellaneous components

TYPE OF WATER SUPPLY

☑ Proposed ☐ Existing
☑ 1. Drilled Well ☐ 2. Dug Well ☐ 3. Private
☐ 4. Public ☐ 5. Other: _____

DESIGN DETAILS (SYSTEM LAYOUT SHOWN ON PAGE 3)

TREATMENT TANK

☑ 1. Concrete
☑ a. Regular
☐ b. Low Profile
☐ c. with lift station
☐ d. water tight
☐ e. two compartment
☐ 2. Plastic
☐ 3. Other: _____
CAPACITY 1000 gallons

DISPOSAL FIELD TYPE & SIZE

☐ 1. Stone Bed ☐ 2. Stone Trench
☑ 3. Proprietary Device 10 END FEED CONCRETE CHAMBERS
☐ a. Cluster Array ☑ c. Linear
☑ b. Regular load ☐ d. H-20 load
☐ 4. Other: _____
SIZE 900 ☑ sq. ft. ☐ lin. ft.

GARBAGE DISPOSAL UNIT

☑ 1. No ☐ 2. Yes ☐ 3. Maybe
If Yes or Maybe, specify one below:
☐ a. Multi-compartment Tank
☐ b. _____ Tanks in Series
☐ c. Increase in Tank Capacity
☐ d. Filter on Tank Outlet

DESIGN FLOW

270 gallons per day
BASED ON
☑ 1. Table 4A (dwelling unit(s)
☐ 2. Table 4C (other facilities)
SHOW CALCULATIONS for other facilities
3 BEDROOMS
☐ 3. Section 4G (meter readings)
ATTACH WATER METER DATA

SOIL DATA & DESIGN CLASS

PROFILE CONDITION
3 / C
at Observation Hole # 1
Depth 16"
OF MOST LIMITING SOIL FACTOR

DISPOSAL FIELD SIZING

☐ 1. Medium -- 2.6 sq. ft./gpd
☑ 2. Medium-Large -- 3.3 sq. ft./gpd
☐ 3. Large -- 4.1 sq. ft./gpd
☐ 4. Extra Large -- 5.0 sq. ft./gpd

EFFLUENT/EJECTOR PUMP

☑ 1. Not Required
☐ 2. May be Required
☐ 3. Required
Specify only for engineered systems
DOSE: _____ gallons

LATTITUDE AND LONGITUDE

at center of disposal area
Lat. 44° d 23 m 21.6 s N
Lon. 68° d 18 m 26.5 s W
if g.p.s., state margin of error 30 ft

SITE EVALUATOR STATEMENT

I certify that on 10-29-19 (date) I completed a site evaluation on this property and state that the data reported are accurate and that the proposed system is in compliance with the State of Maine Subsurface Wastewater Disposal Rules (10-144A CMR 241).

Site Evaluator Signature	SE#	Date
	319	11-1-19
WILLIAM A. LaBELLE, JR.	(207) 537 - 5900	labelleseptic@rivah.net
Site Evaluator Name Printed	Telephone Number	E-mail Address

Note: Changes to or deviations from the design should be confirmed with the Site Evaluator.

SUBSURFACE WASTEWATER DISPOSAL SYSTEM APPLICATION

Maine Dept. of Health & Human Services
Division of Environmental Health, 11 SHS
(207) 287-2070 FAX (207) 287-4172

Town, City, Plantation	Street, Road, Subdivision	Owner or Applicant Name
LAMOINE	ACER LANE	TOM BOHNER

SITE PLAN

Scale 1" = 60 Ft.

(SEE ATTACHED SITE PLAN)

SITE LOCATION PLAN
(Attach map from Maine Atlas for First Time System Variance)

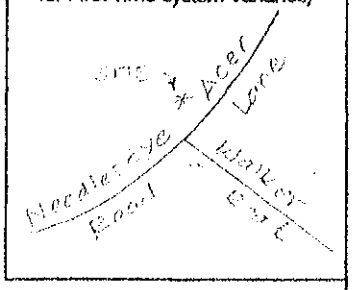

SOIL PROFILE DESCRIPTION AND CLASSIFICATION (Location of Observation Holes Shown Above or on pg. 2A)

Observation Hole #1 ■ Test Pit ☐ Boring

2 " Depth of organic horizon above mineral soil

Depth below mineral soil surface (inches)	Texture	Consistency	Color	Mottling
0–10	SANDY EXTREMELY SHALY LOAM	FRIABLE	DARK YELLOWISH BROWN	N.E.
10–20		VERY SEAMY FIRMING UP	(10YR4/6)	FEW FAINT
20–30				
30–40				
40–50				

Soil Profile	Classification Condition	Slope	Limiting Factor	
3	C	6 %	16 " Depth	■ Ground Water ☐ Restrictive Layer ☐ Bedrock ☐ Pit Depth

Observation Hole #2 ■ Test Pit ☐ Boring

2 " Depth of organic horizon above mineral soil

Depth below mineral soil surface (inches)	Texture	Consistency	Color	Mottling
0–10	SANDY SHALY LOAM	FRIABLE	DARK YELLOWISH BROWN	N.E.
10–20		FIRM IN PLACE	(10YR4/6)	FEW FAINT
20–30				
30–40				
40–50				

Soil Profile	Classification Condition	Slope	Limiting Factor	
3	C	6 %	18 " Depth	■ Ground Water ☐ Restrictive Layer ☐ Bedrock ☐ Pit Depth

[signature] Site Evaluator's Signature

319 S. E. #

11-1-19 Date

Town, City, Plantation	Street, Road, Subdivision	Owner or Applicant Name
LAMOINE	ACER LANE	TOM BOHNER

SITE PLAN:

SCALE: 1" = 60 FT.

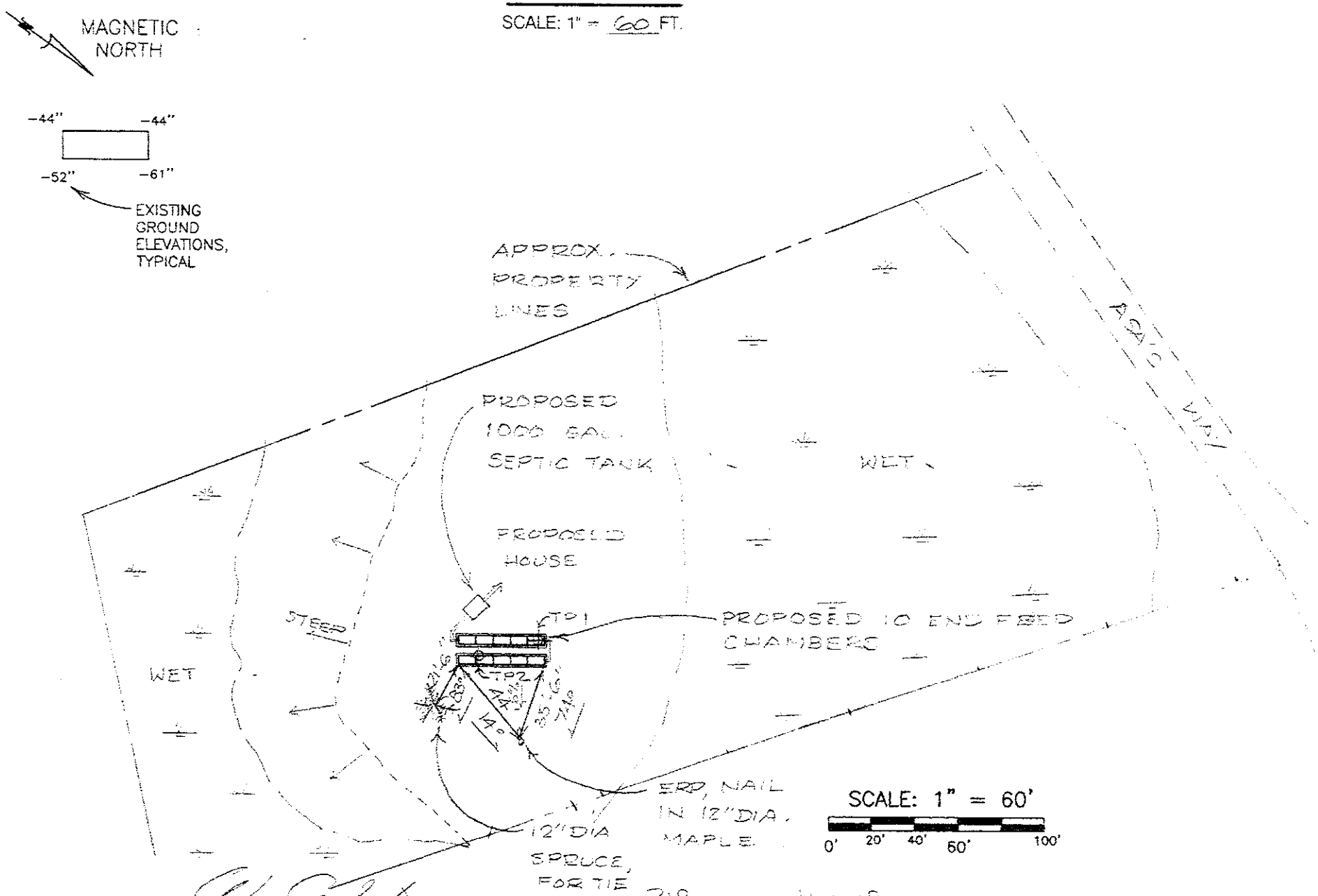

Site Evaluator's Signature	S.E. #	Date
[signature]	319	11-1-19

SUBSURFACE WASTEWATER DISPOSAL SYSTEM APPLICATION

Maine Dept. of Health & Human Services
Division of Environmental Health, 11 SHS
(207) 287-2070 FAX (207) 287-4172

Town, City, Plantation	Street, Road, Subdivision	Owner or Applicant Name
LAMOINE	ACER LANE	TOM BOHMER

SUBSURFACE WASTEWATER DISPOSAL PLAN

SCALE: 1" = 20 FT.

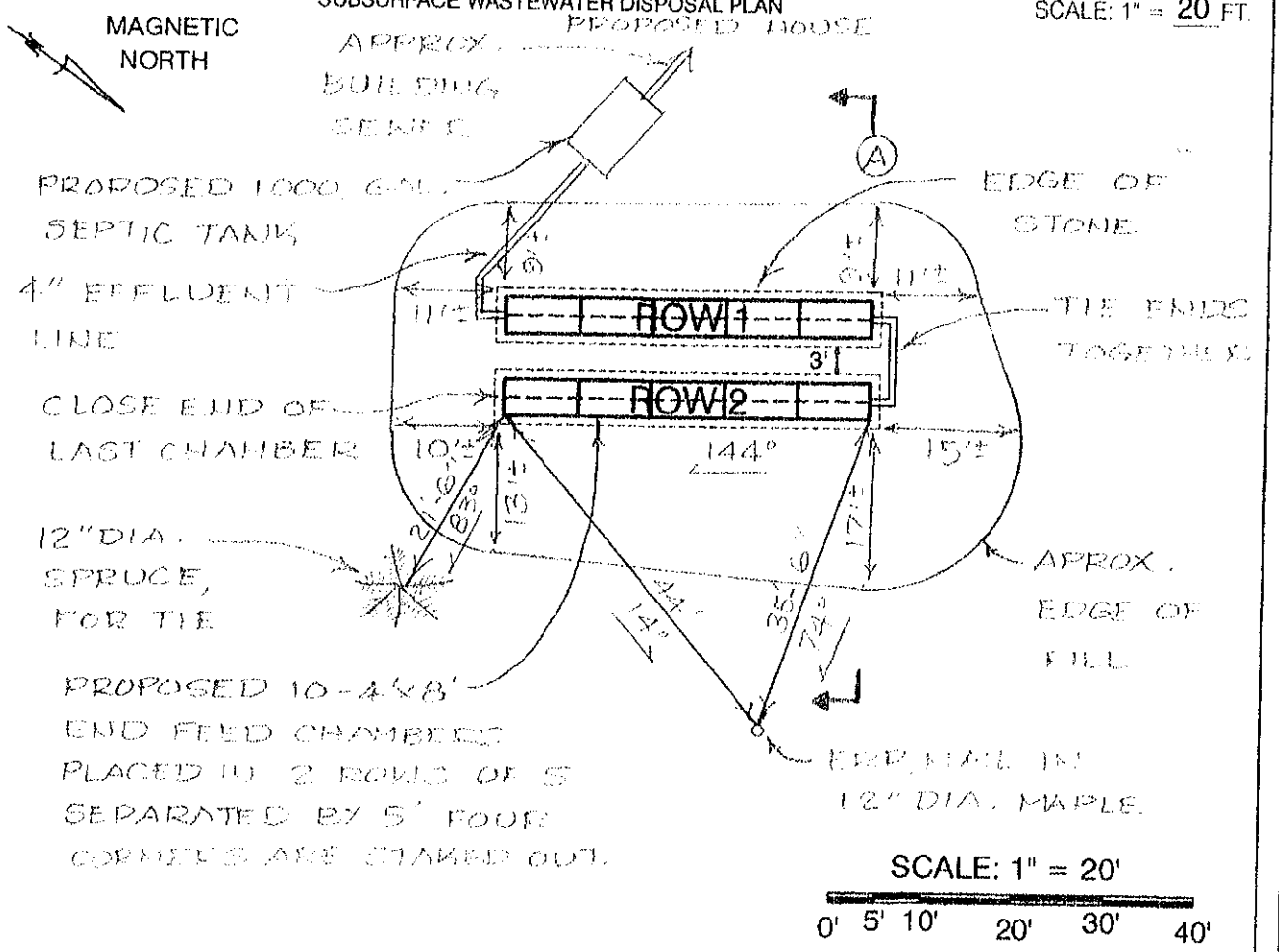

FILL REQUIREMENTS		CONSTRUCTION ELEVATIONS	SYSTEM	PRIV.	ELEVATION REFERENCE POINT
Depth of Backfill (Upslope)	24"	Finished Grade Elevation	(see		Location & Description MAPLE 70"
Depth of Backfill (Downslope)	23"-32"	Top of Distribution Pipe or Proprietary Device	attached	N/A	ABOVE GROUND IN A
Depths @ cross-section shown below or on X-sec. detail.		Bottom of Disposal Field	X-Sec)		12" DIA. MAPLE
					Reference Elevation is: 0

NOTES:

DISPOSAL AREA CROSS SECTION (SEE ATTACHED CROSS SECTION)

1. Tank(s) must be 8' minimum from building.
2. Grade surrounding area to divert surface water away from system.
3. Well to be 51' minimum from septic tank(s) and 100' minimum from disposal field.
4. All work done adjacent to wetlands and water bodies must be done in compliance with section 12 of the Subsurface Wastewater Disposal Rules. Erosion and sediment control measures must be in accordance with the March 2003 edition of the Maine DEP Handbook "Maine Erosion and Sediment Control BMPS" (DEPW0588).
5. Install septic tank(s) risers 18" in diameter "minimum" to within 6" of finished grade on inlet, cleanout and outlet covers (recommend extending risers to finish grade).
6. Full basement below grade foundation or frost wall must be 20' minimum from edge of disposal field and no full basement, slab, columns or posts must be 15' minimum from edge of disposal field.

Site Evaluator's Signature	S.E. #	Date
[signature]	319	11-1-19

DISPOSAL AREA CROSS SECTION
SLOPE 6 %

NOTE:

GRADE UPSLOPE TO DIVERT SURFACE WATER AWAY FROM SYSTEM.

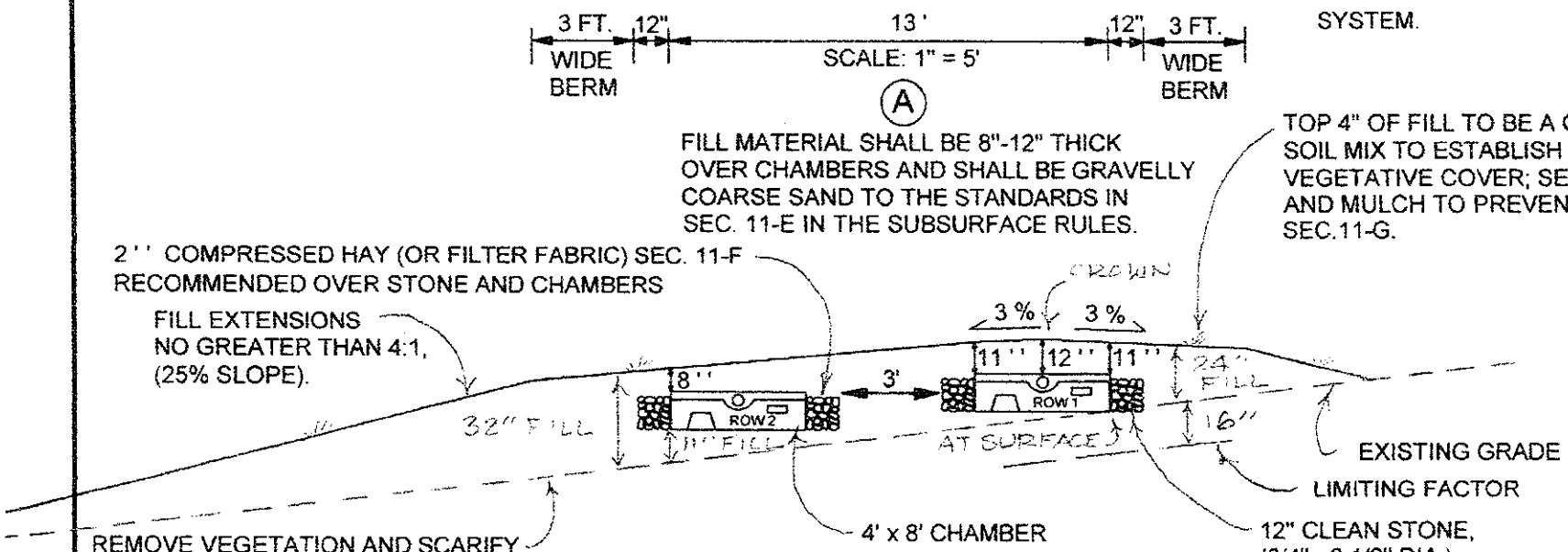

BOTTOM OF CHAMBERS MUST BE LEVEL WITH MAXIMUM GRADE TOLERANCE OF 2" PER 100'.

THOROUGHLY MIX, DISK OR ROTO-TILL CLEAN, COARSE, SHARP SAND INTO TOP 6 INCHES OF ORIGINAL SOIL TO CREATE A TRANSITION ZONE, SEC. 11-B.

ELEVATIONS:

ELEV. REF. PT. (ERP): 0"

	ROW 1	ROW 2
FINISHED GRADE:	(CROWN -19")	(-29" MIN.)
TOP OF CHAMBERS:	-31"	-37"
BOTTOM OF CHAMBERS:	-44"	-50"

NOTE:

SYSTEM MUST BE INSTALLED ACCORDING TO THE RULES AND PRACTICES SET FORTH IN THE MOST CURRENT VERSION OF THE STATE OF MAINE SUBSURFACE WASTEWATER DISPOSAL RULES. INSTALLATION CONTRATOR MUST BE FAMILIAR WITH SAID RULES AND CONSTRUCT SYSTEM IN FULL COMPLIANCE WITH SECTION 11 OF SAID RULES.

OWNER: TOM BOHNER

LOCATION: LAMOINE

DOC17	WILLIAM A. LaBELLE, JR.	319	11-1-19
		S.E.#	DATE