Town

[redacted]

Maine Dept.Health & Human Services
Div of Environmental Health , 11 SHS
(207) 287-5672 Fax: (207) 287-3165

## PROPERTY LOCATION

| | |
|---|---|
| City, Town, or Plantation | LAMOINE |
| Street or Road | SHORE ROAD |
| Subdivision, Lot # | |

## >> CAUTION: PERMIT REQUIRED - ATTACH IN SPACE BELOW <<

7/24/12 #1692 $265.00

Lamoine

The Subsurface Wastewater Disposal System ***shall not*** be installed until a Permit is attached HERE by the Local Plumbing Inspector. The Permit shall authorize the owner or installer to install the disposal system in accordance with this application and the Maine Subsurface Wastewater Disposal Rules.

LPI# 1011

Municipal Tax Map # 1 Lot # 36

## OWNER/APPLICANT INFORMATION

| | |
|---|---|
| Name (last, first, MI) | BERZINIS, NICOLE — X Owner / Applicant |
| Mailing Address of Owner/Applicant | 1438 SHORE ROAD<br>LAMOINE, ME 04605 |
| Daytime Tel. # | |

**OWNER OR APPLICANT STATEMENT**

I state and acknowledge that the information submitted is correct to the best of my knowledge and understand that any falsification is reason for the Department and/or Local Plumbing Inspector to deny a Permit.

Signature of Owner or Applicant — Date 7/20/12

**CAUTION: INSPECTION REQUIRED**

I have inspected the installation authoirzed above and found it to be in compliance with the Subsurface Wastewater Disposal Rules Application.

Local Plumbing Inspector Signature — (1st) date approved — (2nd) date approved 8/31/12

## PERMIT INFORMATION

### TYPE OF APPLICATION

X 1. First Time System
2. Replacement System
Type replaced: _____
Year installed: _____
3. Expanded System
a. <25% Expansion
b. >25% Expansion
4. Experimental System
5. Seasonal Conversion

### THIS APPLICATION REQUIRES

X 1. No Rule Variance
2. First Time System Variance
a. Local Plumbing Inspector Approval
b. State & Local Plumbing Inspector Approval
3. Replacement System Variance
a. Local Plumbing Inspector Approval
b. State & Local Plumbing Inspector Approval
4. Minimum Lot Size Variance
5. Seasonal Conversion Permit

### DISPOSAL SYSTEM COMPONENTS

X 1. Complete Non-engineered System
2. Primitive System (graywater & alt. toilet)
3. Alternative Toilet, specify: _____
4. Non-engineered Treatment Tank (only)
5. Holding Tank, _____ gallons
6. Non-engineered Disposal Field (only)
7. Separated Laundry System
8. Complete Engineered System (2000 gpd or more)
9. Engineered Treatment Tank (only)
10. Engineered Disposal Field (only)
11. Pre-treatment, specify: _____
12. Miscellaneous Components

### SIZE OF PROPERTY

5+ X ACRES (SQ. FT.)

### SHORELAND ZONING

Yes X No

### DISPOSAL SYSTEM TO SERVE

1. Single Family Dwelling Unit, No. of Bedrooms: 3
2. Multiple Family Dwelling, No. of Units: _____
3. Other: _____ (specify)

Current Use X Seasonal Year Round Undeveloped

### TYPE OF WATER SUPPLY

X 1. Drilled Well 2. Dug Well 3. Private
4. Public 5. Other

## DESIGN DETAILS (SYSTEM LAYOUT SHOWN ON PAGE 3)

### TREATMENT TANK

X 1. Concrete
X a. Regular
b. Low Profile
2. Plastic
3. Other: _____
CAPACITY: 1000 GAL.

### DISPOSAL FIELD TYPE & SIZE

1. Stone Bed 2. Stone Trench
X 3. Proprietary Device
a. cluster array X c. Linear
X b. regular load d. H-20 load
4. Other: _____
SIZE: 900 sq. ft. lin. ft.

### GARBAGE DISPOSAL UNIT

1. No 2. Yes 3. Maybe
If Yes or Maybe, specify one below:
a. multi-compartment tank
b. ___ tanks in series
c. increase in tank capacity
X d. Filter on Tank Outlet

### DESIGN FLOW

270 gallons per day
BASED ON:
X 1. Table 4A (dwelling unit(s))
2. Table 4C(other facilities)
SHOW CALCULATIONS for other facilites
3. Section 4G (meter readings)
ATTACH WATER METER DATA

### SOIL DATA & DESIGN CLASS

PROFILE CONDITION
3 / C
at Observation Hole # _____
Depth 20 "
of Most Limiting Soil Factor

### DISPOSAL FIELD SIZING

1. Medium---2.6 sq. ft. / gpd
X 2. Medium---Large 3.3 sq. f.t / gpd
3. Large---4.1 sq. ft. / gpd
4. Extra Large---5.0 sq. ft. / gpd

### EFFLUENT/EJECTOR PUMP

X 1. Not Required
2. May Be Required
3. Required
Specify only for engineered systems:
DOSE: _____ gallons

### LATITUDE AND LONGITUDE

at center of disposal area
Lat. 44 d 27 m 37.7 s
Lon. -68 d 19 m 55.3 s
if g.p.s, state margin of error: _____

## SITE EVALUATOR STATEMENT

I certify that on 7-11-2012 (date) I completed a site evaluation on this property and state that the data reported are accurate and that the proposed system is in compliance with the State of Maine Subsurface Wastewater Disposal Rules (10-144A CMR 241).

Site Evaluator Signature — SE # #326 — Date 7-19-2012

ANDREW MCCULLOUGH — Site Evaluator Name Printed
207-667-6551 — Telephone Number
mccengr@myfairpoint.net — E-mail Address

Note : Changes to or deviations from the design should be confirmed with the Site Evaluator.

# SUBSURFACE WASTEWATER DISPOSAL SYSTEM APPLICATION

Department of Human Services
Division of Health Engineering
(207) 287-5672 Fax: (207) 287-3165

| Town, City, Plantation | Street, Road, Subdivision | Owner's Name |
|---|---|---|
| LAMOINE | SHORE ROAD | BERZINIS, NICOLE |

**SITE PLAN** Scale 1" = _____ ft. or as shown

SITE LOCATION PLAN
(map from Maine Atlas recommended)

SEE ATTACHED

SEE ATTACHED

## SOIL DESCRIPTION AND CLASSIFICATION (Location of Observation Holes Shown Above)

Observation Hole 1 [X] Test Pit [ ] Boring
2 " Depth of Organic Horizon Above Mineral Soil

Depth Below Mineral Soil Surface (inches)

| Texture | Consistency | Color | Mottling |
|---|---|---|---|
| SANDY LOAM | FRIABLE | DARK BROWN | NONE |
| | | STRONG BROWN AND YELL. BROWN | |
| | SOMEWHAT FIRM | LT. OLIVE BROWN | COMMON DISTINCT |

| Soil Classification | | Slope | Limiting Factor | |
|---|---|---|---|---|
| 3 | C | 1 % | | [ ] Ground Water |
| Profile | Condition | | | [X] Restrictive Layer |
| | | | | [ ] Bedrock |
| | | | 20 " | [ ] Pit Depth |

Observation Hole _____ [ ] Test Pit [ ] Boring
_____ " Depth of Organic Horizon Above Mineral Soil

Depth Below Mineral Soil Surface (inches)

| Texture | Consistency | Color | Mottling |
|---|---|---|---|
| | | | |

| Soil Classification | | Slope | Limiting Factor | |
|---|---|---|---|---|
| | | % | | [ ] Ground Water |
| Profile | Condition | | | [ ] Restrictive Layer |
| | | | | [ ] Bedrock |
| | | | " | [ ] Pit Depth |

Site Evaluator Signature _____ SE # 326 Date 7-19-2012

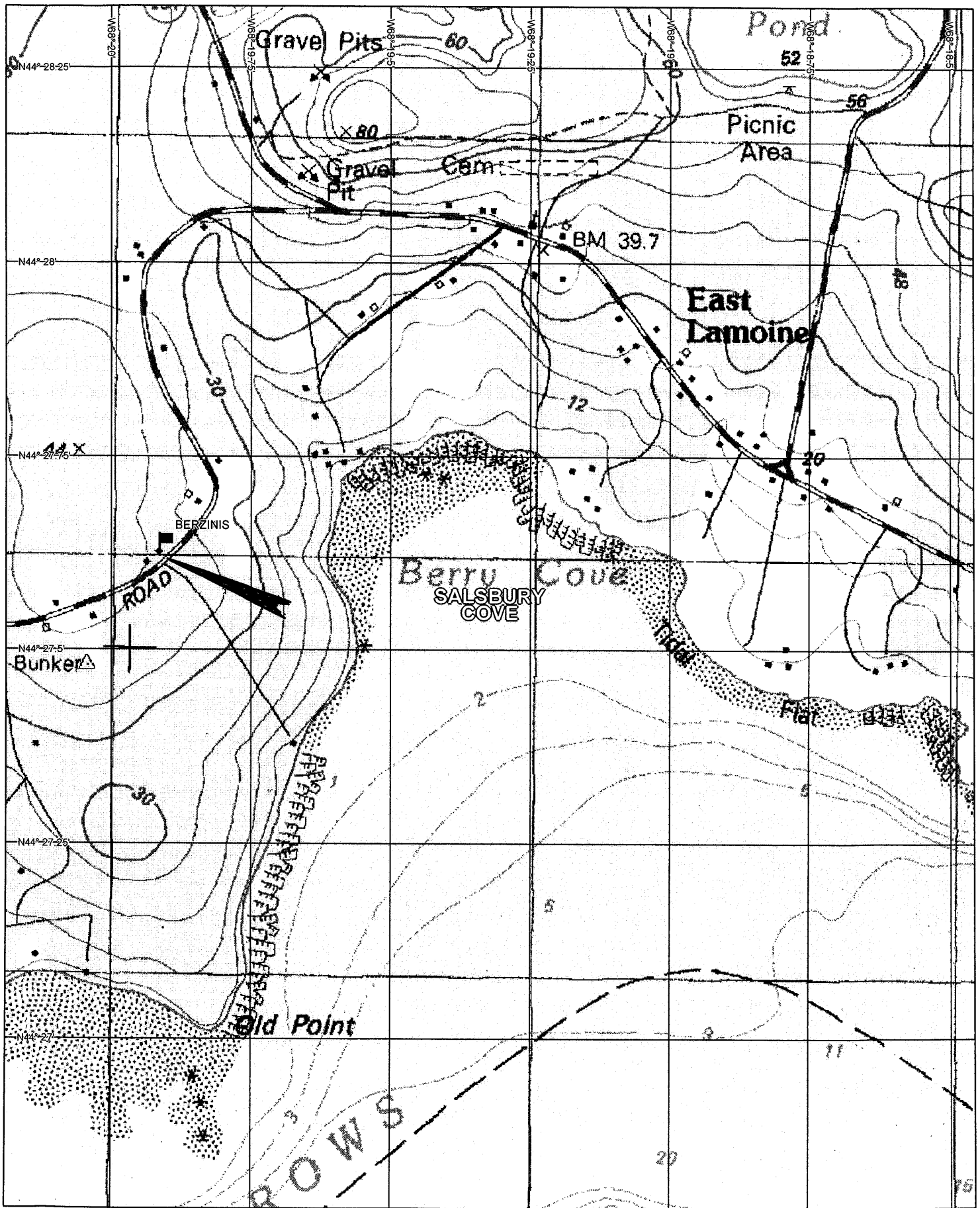


3-D TopoQuads Copyright © 1999 DeLorme Yarmouth, ME 04096 Source Data: USGS 450 ft Scale: 1 : 12,000 Detail: 14-0 Datum: WGS84

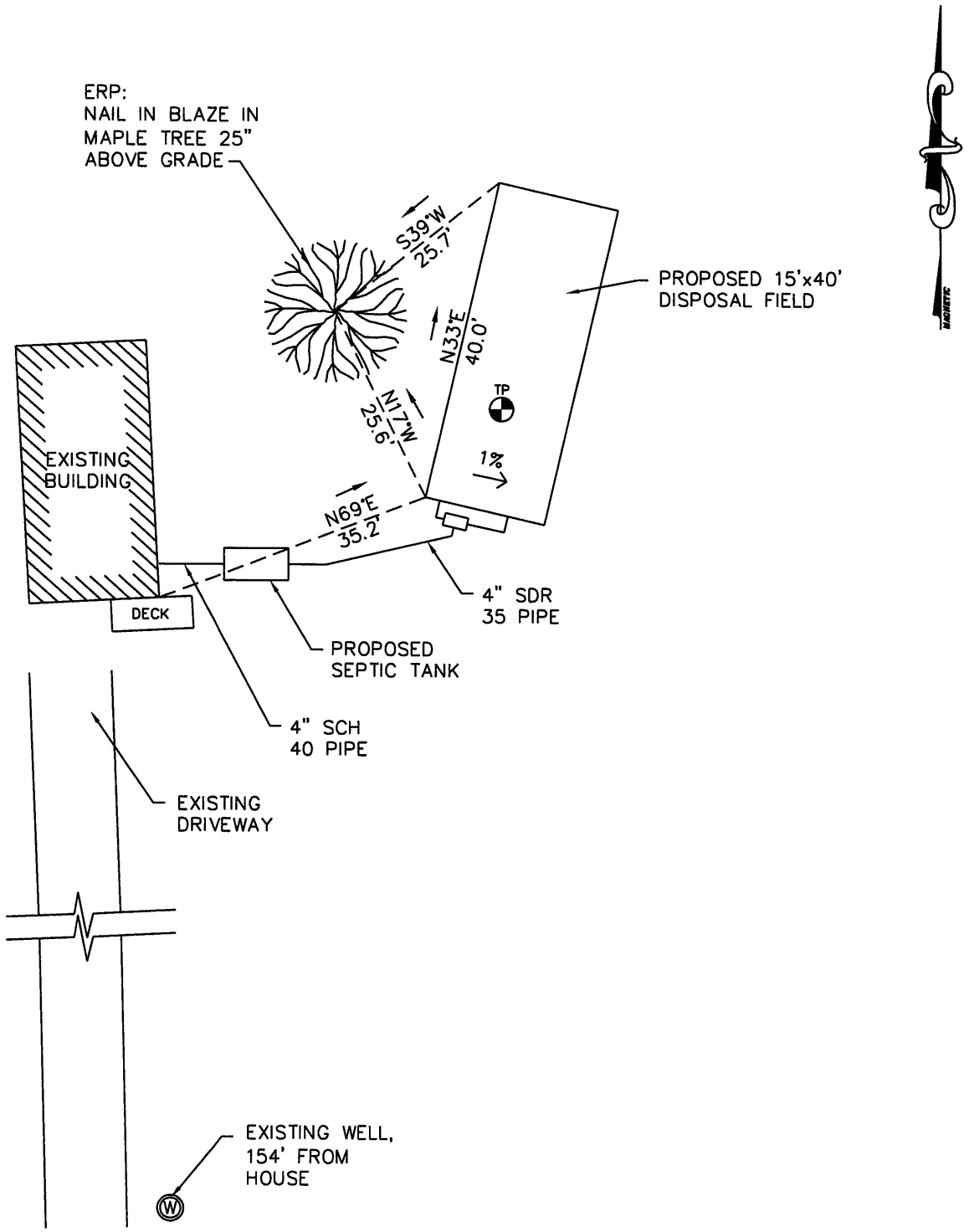


| | | |
|---|---|---|
| Project: 1443 | Firm Name and Address: Andrew McCullough Engineering Consultants 93 Bucksport Road Ellsworth, ME | Project Name and Address: SITE SKETCH Prepared For: NICOLE BERZINIS Shore Road Lamoine, Maine |
| Date: 7/18/12 | | |
| Scale: 1"=20' | | |
| Sheet: Exhibit 1 | | |

# SUBSURFACE WASTEWATER DISPOSAL SYSTEM APPLICATION

Department of Human Services
Division of Health Engineering
(207) 287-5672 Fax: (207) 287-3165

| Town, City, Plantation | Street, Road, Subdivision | Owner's Name |
|---|---|---|
| LAMOINE | SHORE ROAD | BERZINIS, NICOLE |

## SUBSURFACE WASTEWATER DISPOSAL PLAN

SCALE: 1" = _____ FT.

SEE ATTACHED

| FILL REQUIREMENTS | | CONSTRUCTION ELEVATIONS | | ELEVATION REFERENCE POINT |
|---|---|---|---|---|
| Depth of Fill (Upslope) | SEE CROSS-SECTION | Finished Grade Elevation | SEE CROSS-SECTION | Location & Description: NAIL IN BLAZE IN MAPLE TREE-25' ABOVE GROUND |
| | | Top of Distribution Pipe or Proprietary Device | | Reference Elevation: 0' ASSUMED |
| Depth of Fill (Downslope) | | Bottom of Disposal Area | | |

## DISPOSAL AREA CROSS SECTION

Scale
Horizontal 1" = _____ ft.
Vertical 1" = _____ ft.

SEE ATTACHED

Andrew McCullough — Site Evaluator Signature
326 — SE #
7-19-2012 — Date

# DISPOSAL AREA PLAN

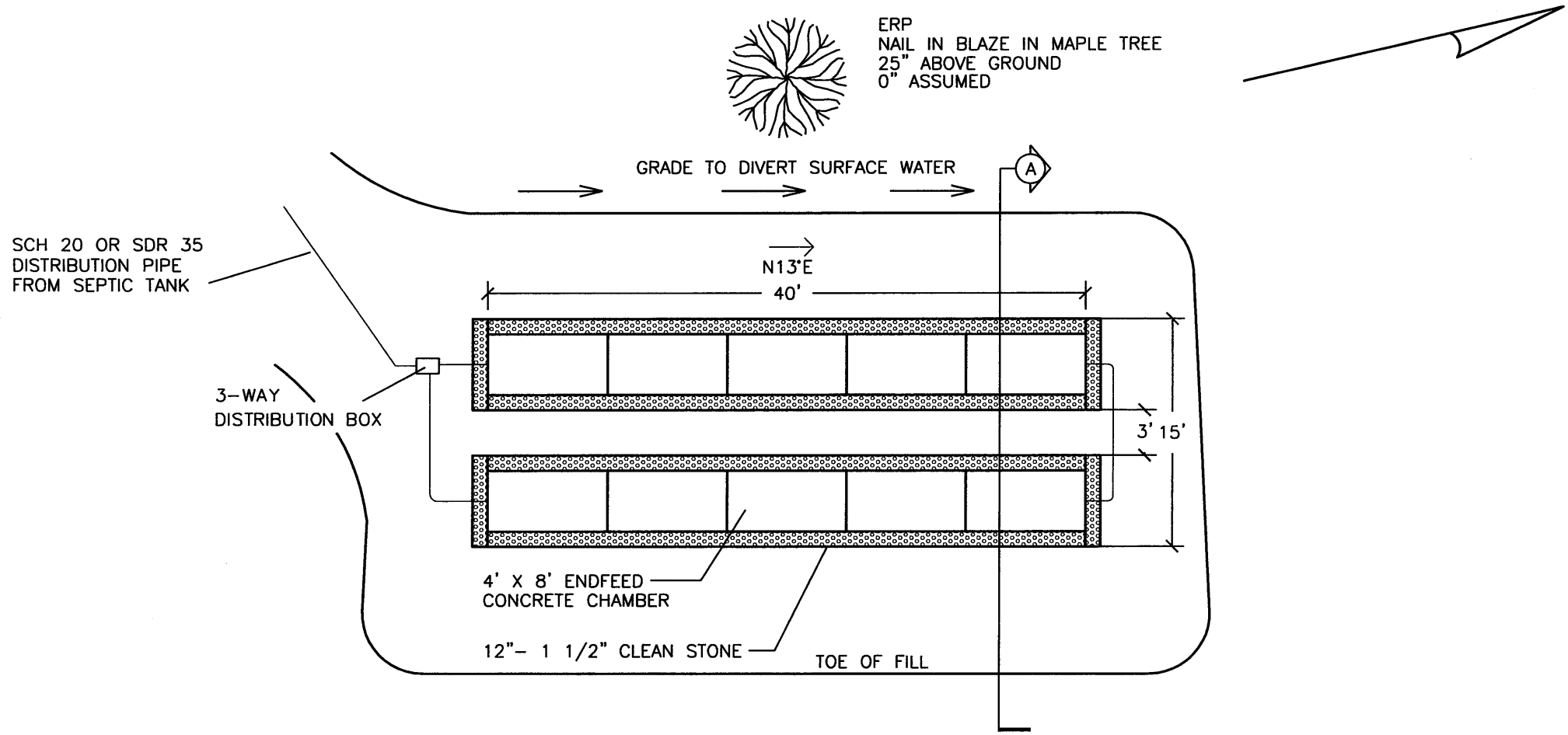


DISPOSAL AREA PLAN
NICOLE BERZINIS
SCALE 1"=10'
7/18/2012

# TYPICAL SECTION A

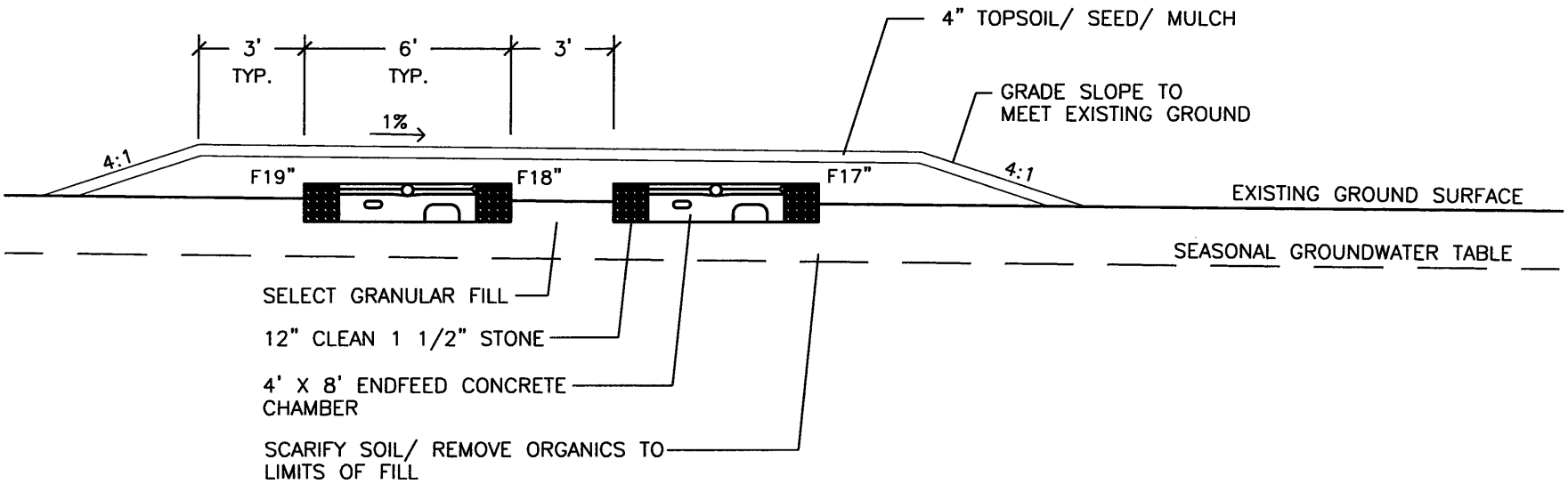


NOTE: MAINTAIN 8" MINIMUM SELECT GRANULAR FILL COVER OVER CONCRETE CHAMBERS

ELEVATIONS

| Row | Bottom | Top |
|---|---|---|
| 1 | −42" | −29" |
| 2 | −42" | −29" |

DISPOSAL AREA SECTION A
NICOLE BERZINIS
SCALE 1"=5'
7/18/2012