SUBSURFACE WASTEWATER DISPOSAL SYSTEM APPLICATION

Maine Dept. of Health & Human Services
Division of Environmental Health, 11 SHS
(207) 287-5672 FAX (207) 287-4172

PROPERTY LOCATION

City, Town, or Plantation	LAMOINE
Street or Road	MISTY WAY
Subdivision, Lot #	LOT # 2

>> CAUTION: LPI APPROVAL REQUIRED <<

Town/City LAMOINE Permit # 1702

Date Permit Issued 10/2/12 Fee $ 250 Double Fee Charged ( )

Local Plumbing Inspector Signature L.P.I. # 1090

☐ Owner ☒ Town ☐ State

OWNER/APPLICANT INFORMATION

Name (last, first, MI) BOCCIA-YOUNG HABITAT HOUSE17 ■ Owner ☐ Applicant

Mailing Address of ☐ Owner ■ Applicant: GOODSON, JIMMY, HABITAT FOR HUMANITY, P.O. BOX 343, ELLSWORTH, ME 04605

Daytime Tel. # (207) 667-8484

The Subsurface Wastewater Disposal System shall not be installed until a Permit is issued by the Local Plumbing Inspector. The Permit shall authorize the owner or installer to install the disposal system in accordance with the application and the Maine Subsurface Wastewater Disposal Rules.

Municipal Tax Map # 4 Lot # 36-12

OWNER OR APPLICANT STATEMENT

I state and acknowledge that the information submitted is correct to the best of my knowledge and understand that any falsification is reason for the Department and/or Local Plumbing Inspector to deny a permit.

Signature of Owner or Applicant _____ Date _____

CAUTION: INSPECTION REQUIRED

I have inspected the installation authorized above and found it to be in compliance with Subsurface Wastewater Disposal Rules Application. 11/6/12 (1st Date Approved)

Local Plumbing Inspector Signature 12/4/12 (2nd Date Approved)

PERMIT INFORMATION

TYPE OF APPLICATION

■ 1. First Time System
☐ 2. Replacement System
Type Replaced: _____
Year Installed: _____
☐ 3. Expanded System
☐ a. < 25% Expansion
☐ b. ≥ 25% Expansion
☐ 4. Experimental System
☐ 5. Seasonal Conversion

SIZE OF PROPERTY

_____ ☐ sq. ft.
2.08 ■ acres

SHORELAND ZONING

☐ Yes ■ No

THIS APPLICATION REQUIRES

■ 1. No Rule Variance
☐ 2. First Time System Variance
☐ a. Local Plumbing Inspector Approval
☐ b. State & Local Plumbing Inspector Approval
☐ 3. Replacement System Variance
☐ a. Local Plumbing Inspector Approval
☐ b. State & Local Plumbing Inspector Approval
☐ 4. Minimum Lot Size Variance
☐ 5. Seasonal Conversion Permit

DISPOSAL SYSTEM TO SERVE

■ 1. Single Family Dwelling Unit, No. of Bedrooms: 3
☐ 2. Multiple Family Dwelling, No. of Units: _____
☐ 3. Other: (SPECIFY) _____

Current Use: ☐ Seasonal ☐ Year Round ■ Undeveloped

DISPOSAL SYSTEM COMPONENT(S)

■ 1. Complete Non-engineered System
☐ 2. Primitive System (graywater & alt. toilet)
☐ 3. Alternative Toilet, specify: _____
☐ 4. Non-engineered Treatment Tank (only)
☐ 5. Holding Tank, _____ gallons
☐ 6. Non-engineered Disposal Field (only)
☐ 7. Separated Laundry System
☐ 8. Complete Engineered System(2000 gpd or more)
☐ 9. Engineered Treatment Tank (only)
☐ 10. Engineered Disposal Field (only)
☐ 11. Pre-treatment, specify: _____
☐ 12. Miscellaneous components

TYPE OF WATER SUPPLY

TO BE
■ 1. Drilled Well ☐ 2. Dug Well ☐ 3. Private
☐ 4. Public ☐ 5. Other: _____

DESIGN DETAILS (SYSTEM LAYOUT SHOWN ON PAGE 3)

TREATMENT TANK

■ 1. Concrete
■ a. Regular
☐ b. Low Profile
☐ 2. Plastic
☐ 3. Other: _____
CAPACITY 1000 gallons

SOIL DATA & DESIGN CLASS

PROFILE CONDITION
8 / D
at Observation Hole # 1
Depth 12 "
OF MOST LIMITING SOIL FACTOR

DISPOSAL FIELD TYPE & SIZE

☐ 1. Stone Bed ☐ 2. Stone Trench
■ 3. Proprietary Device PRESBY ENVIRO-SEPTIC PIPE
☐ a. Cluster Array ■ c. Linear
■ b. Regular load ☐ d. H-20 load
☐ 4. Other: _____
SIZE 240 ☐ sq. ft. ■ lin. ft.

DISPOSAL FIELD SIZING

☐ 1. Medium – 2.6 sq. ft./gpd
☐ 2. Medium-Large – 3.3 sq. ft./gpd
■ 3. Large – 4.1 sq. ft./gpd
☐ 4. Extra Large – 5.0 sq. ft./gpd

GARBAGE DISPOSAL UNIT

■ 1. No ☐ 2. Yes ☐ 3. Maybe
If Yes or Maybe, specify one below:
☐ a. Multi-compartment Tank
☐ b. _____ Tanks in Series
☐ c. Increase in Tank Capacity
☐ d. Filter on Tank Outlet

EFFLUENT/EJECTOR PUMP

■ 1. Not Required
☐ 2. May be Required
☐ 3. Required
Specify only for engineered systems
DOSE: _____ gallons

DESIGN FLOW

270 gallons per day
BASED ON
■ 1. Table 4A (dwelling unit(s)
☐ 2. Table 4C (other facilities)
SHOW CALCULATIONS for other facilities
☐ 3. Section 4G (meter readings)
ATTACH WATER METER DATA

LATTITUDE AND LONGITUDE

at Center of Disposal Area
Lat. 44° d 28' m 54" s N
Lon. 68° d 17' m 45" s W
If g.p.s., state margin of error 30'±

SITE EVALUATOR STATEMENT

I certify that on 9-16-12 (date) I completed a site evaluation on this property and state that the data reported are accurate and that the proposed system is in compliance with the State of Maine Subsurface Wastewater Disposal Rules (10-144A CMR 241).

Site Evaluator Signature	SE# 319	Date 9-19-12
WILLIAM A. LaBELLE, JR.	(207) 537-5900	labelleseptic@rivah.net
Site Evaluator Name Printed	Telephone Number	E-mail Address

Note: Changes to or deviations from the design should be confirmed with the Site Evaluator.

SUBSURFACE WASTEWATER DISPOSAL SYSTEM APPLICATION

Maine Dept. of Health & Human Services
Division of Environmental Health, 11 SHS
(207) 287-5672 FAX (207) 287-4172

Town, City, Plantation	Street, Road, Subdiviision	Owner or Applicant Name
LAMOINE	MISTY WAY	BOCCIA-YOUNG HABITAT HOUSE 17

SITE PLAN

Scale 1" = 40 Ft.

SITE LOCATION PLAN
(Attach map from Maine Atlas for First Time System Variance)

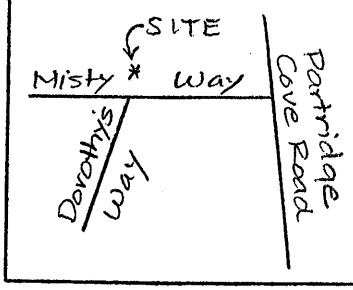

(SEE ATTACHED SITE PLAN)

SOIL PROFILE DESCRIPTION AND CLASSIFICATION (Location of Observation Holes Shown Above or on pg. 2A)

Observation Hole #1 ■ Test Pit ☐ Boring

3 " Depth of organic horizon above mineral soil

Depth below mineral soil surface (inches)	Texture	Consistency	Color	Mottling
0–10	LOAMY VERY FINE SAND	FRIABLE	LIGHT GRAY (7.5YR 7/1); STRONG BROWN (7.5Y 4/6)	N.E.
10–20	VERY FINE SANDY SILT	COMPACTED	LIGHT OLIVE BROWN (2.5Y 5/4)	COMMON DISTINCT
20–50				

Soil Profile	Classification Condition	Slope	Limiting Factor	Depth
8	D	0 %	■ Ground Water ☐ Restrictive Layer ☐ Bedrock ☐ Pit Depth	12 "

Observation Hole #2 ■ Test Pit ☐ Boring

3 " Depth of organic horizon above mineral soil

Depth below mineral soil surface (inches)	Texture	Consistency	Color	Mottling
0–10	LOAMY VERY FINE SAND	FRIABLE	DARK YEL. BROWN (10YR 3/4); DARK YELLOWISH BROWN (10YR 4/6)	N.E. COMMON
10–20	VERY FINE SANDY SILT	COMPACTED	LIGHT OLIVE BROWN (2.5Y 5/4)	DISTINCT
20–50				

Soil Profile	Classification Condition	Slope	Limiting Factor	Depth
8	D	6 %	■ Ground Water ☐ Restrictive Layer ☐ Bedrock ☐ Pit Depth	12 "

Site Evaluator's Signature: [signature]

S. E. #: 319

Date: 9-19-12

Town, City, Plantation	Street, Road, Subdivision	Owner or Applicant Name
LAMOINE	MISTY WAY	BOCCIA-YOUNG HABITAT HOUSE 17

SITE PLAN:

SCALE: 1" = 40 FT.

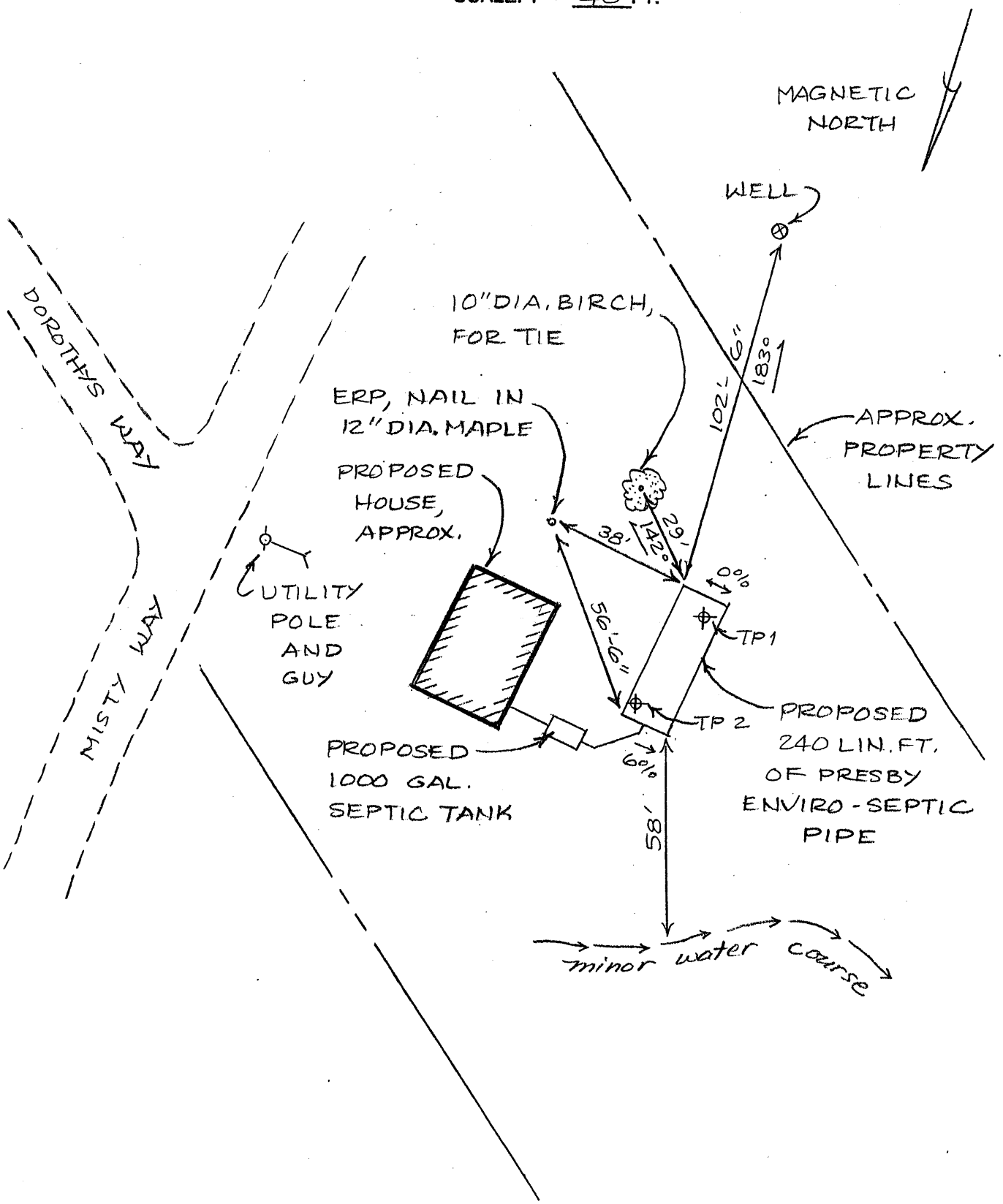

Site Evaluator's Signature	S.E. #	Date
[signature]	319	9-19-12

SUBSURFACE WASTEWATER DISPOSAL SYSTEM APPLICATION

Maine Dept. of Health & Human Services
Division of Environmental Health, 11 SHS
(207) 287-5672 FAX (207) 287-4172

Town, City, Plantation	Street, Road, Subdivision	Owner or Applicant Name
LAMOINE	MISTY WAY	BOCCIA-YOUNG HABITAT HOUSE 17

SUBSURFACE WASTEWATER DISPOSAL PLAN

SCALE: 1" = 20 FT.

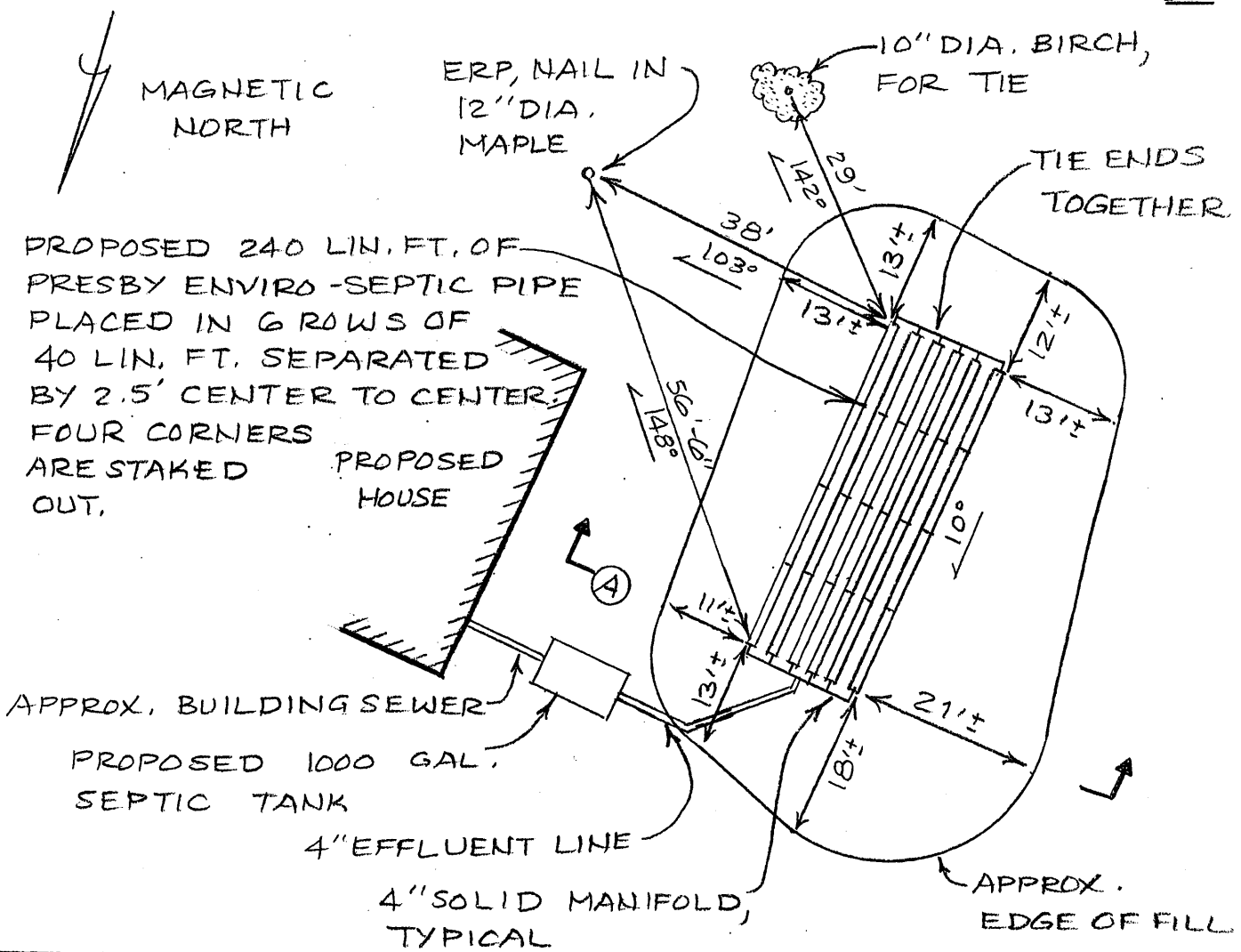

FILL REQUIREMENTS		CONSTRUCTION ELEVATIONS	SYSTEM:	PRIVY:	ELEVATION REFERENCE POINT
Depth of Backfill (Upslope)	30"	Finished Grade Elevation	-36"		Location & Description NAIL 57"
Depth of Backfill (Downslope)	30"-40"	Top of Distribution Pipe or Proprietary Device	-48"	N/A	ABOVE GROUND IN 12" DIA.
Depths @ cross-section shown below or on X-sec. detail.		Bottom of Disposal Field (PIPE)	-60"		MAPLE. Reference Elevation is: 0"

DISPOSAL AREA CROSS SECTION (SEE ATTACHED CROSS SECTION)

NOTES:

1. TANK(S) MUST BE 8' MINIMUM FROM BUILDING.
2. GRADE SURROUNDING AREA TO DIVERT SURFACE WATER AWAY FROM SYSTEM.
3. WELL TO BE 51' MINIMUM FROM SEPTIC TANK(S) AND 100' MINIMUM FROM DISPOSAL FIELD.
4. ALL WORK DONE ADJACENT TO WETLANDS AND WATER BODIES MUST BE DONE IN COMPLIANCE WITH SECTION 11-M OF THE SUBSURFACE WASTEWATER DISPOSAL RULES; EROSION AND SEDIMENT CONTROL MEASURES MUST BE IN ACCORDANCE WITH THE MARCH 2003 EDITION OF THE MAINE DEP HANDBOOK "MAINE EROSION AND SEDIMENT CONTROL BMPS" (DEPLW0588).
5. INSTALL SEPTIC TANK RISERS 18" IN DIAMETER "MINIMUM" TO WITHIN 6" OF FINISH GRADE ON INLET, CLEANOUT AND OUTLET COVERS (RECOMMEND EXTENDING RISERS TO FINISH GRADE).
6. FULL BASEMENT BELOW GRADE FOUNDATION, FROST WALL OR COLUMNS MUST BE 20' MINIMUM FROM EDGE OF DISPOSAL FIELD AND SLAB ON GRADE MUST BE 15' MINIMUM FROM EDGE OF DISPOSAL FIELD.

Site Evaluator's Signature	S.E. #	Date
[signature]	319	9-19-12

ENVIRO-SEPTIC CROSS SECTION

Ⓐ

NOTE: GRADE UPSLOPE TO DIVERT SURFACE WATER AWAY FROM SYSTEM.

FILL MATERIAL SHALL BE 8" THICK OVER PIPE
3 TO 4" LOAM FILL MATERIAL SHALL BE GRAVELLY COARSE SAND TO THE STANDARDS IN SEC. 11-E IN THE RULES.

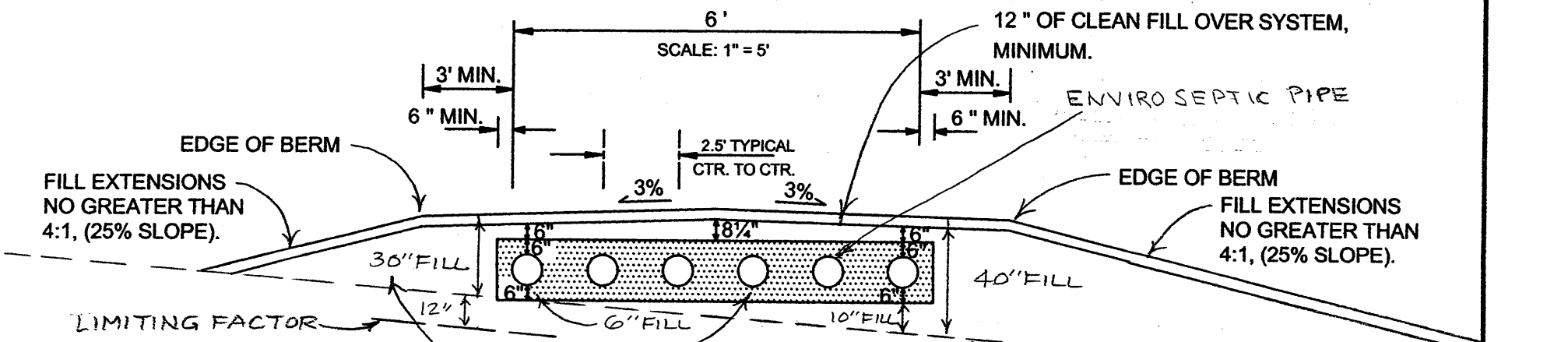

FILL UNDER AND AROUND SYSTEM TO BE COARSE GRAVELLY SANDS.

6 '' SAND UNDER, OVER, AND AROUND ENVIRO SEPTIC PIPE; CLEAN, COARSE SAND (ASTM STANDARD: C - 33 " CONCRETE SAND ")

BOTTOM OF ENVIRO SEPTIC PIPE MUST BE LEVEL WITH MAXIMUM GRADE TOLERANCE OF 2 " PER 100'.

REMOVE VEGETATION AND SCARIFY ORIGINAL SOIL UNDER ENTIRE FILL AREA, SEC. 11-B.

THOROUGHLY MIX, DISK OR ROTO-TILL CLEAN, COARSE, SHARP SAND INTO TOP 4 INCHES OF ORIGINAL SOIL CREATE A TRANSITION ZONE, SEC. 11-B.

ELEVATIONS:

ELEV. REF. PT. (ERP):	0"
FINISHED GRADE:	- 36"
TOP OF PIPE:	- 48"
BOTTOM OF PIPE:	- 60"
BOTTOM OF SAND:	- 66"

NOTE:
SYSTEM MUST BE INSTALLED ACCORDING TO THE RULES AND PRACTICES SET FORTH IN THE MOST CURRENT VERSION OF THE STATE OF MAINE SUBSURFACE WASTEWATER DISPOSAL RULES. INSTALLATION CONTRATOR MUST BE FAMILIAR WITH SAID RULES AND CONSTRUCT SYSTEM IN FULL COMPLIANCE WITH SECTION 11 OF SAID RULES.

OWNER: BOCCIA-YOUNG HABITAT HOUSE 17

LOCATION: LAMOINE

WILLIAM A. LaBELLE, JR.	319	9-19-12
	S.E.#	DATE